POWER UNIT

CONTENTS

FLYWHEEL COVER 7- 2
- REMOVAL 7- 2
- INSTALLATION 7- 2

INTAKE MANIFOLD 7- 3
- REMOVAL 7- 3
- INSTALLATION 7- 4

POWER UNIT 7- 5
- REMOVAL 7- 5
- INSTALLATION 7-10

OIL PUMP 7-14
- DISASSEMBLY 7-14
- INSPECTION 7-14
- ASSEMBLY 7-15

CYLINDER HEAD ASSEMBLY (Cylinder head/valve) 7-16
- REMOVAL 7-16
- ASSEMBLY 7-19
- DISASSEMBLY 7-22
- INSPECTION/SERVICING 7-23
- REASSEMBLY 7-30

CYLINDER/CRANKSHAFT/PISTON/CAMSHAFT 7-32
- DISASSEMBLY 7-32
- INSPECTION/SERVICING 7-35
- REASSEMBLY 7-46

THERMOSTAT 7-55
- REMOVAL 7-55
- INSPECTION 7-55
- INSTALLATION 7-56

OPERATION 7-57
- WATER COOLING SYSTEM 7-57
- ENGINE LUBRICATION SYSTEM 7-58

FLYWHEEL COVER

REMOVAL

Prior to removing flywheel cover:
- **Disconnect battery cables from battery.**

1. Loosen the clamp securing breather hose, then remove the breather hose ① from flywheel cover ②.

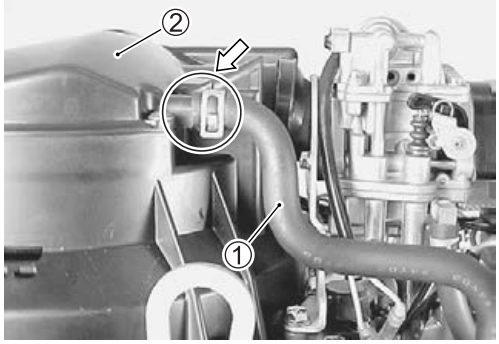

2. Loosen the clamp ④ securing outlet tube ③ to flywheel cover ②.

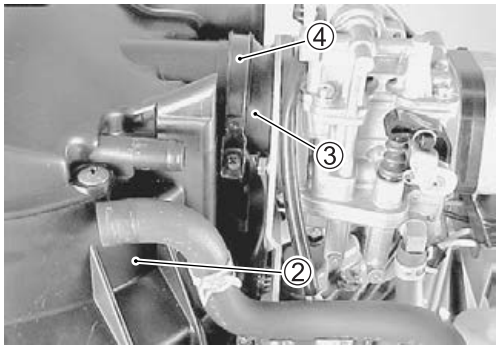

3. Remove the three (3) bolts and flywheel cover ②.

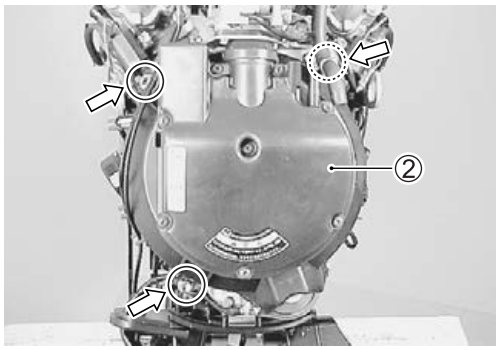

INSTALLATION

Installation is reverse order of removal.

INTAKE MANIFOLD

REMOVAL

Before removing intake manifold:
- **Disconnect battery cables from battery.**

1. [Manual start model]
   Remove the recoil starter ①. (See page 6-2.)

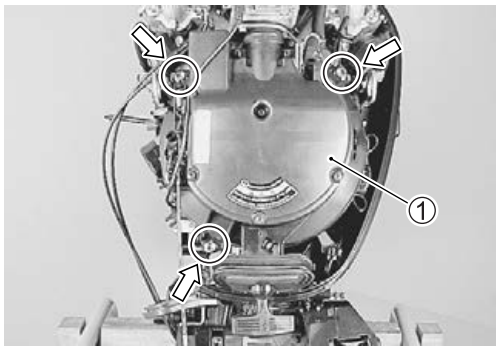

   [Electric start model]
   Remove the flywheel cover ②. (See page 7-2.)

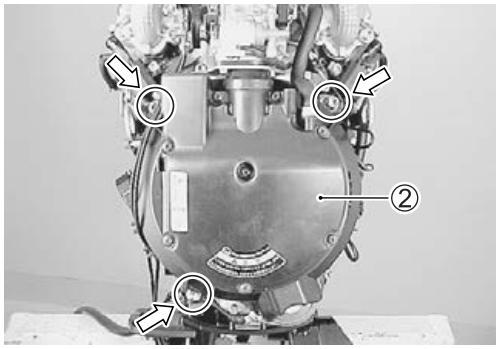

2. Remove the carburetor assembly ③. (See page 5-4.)

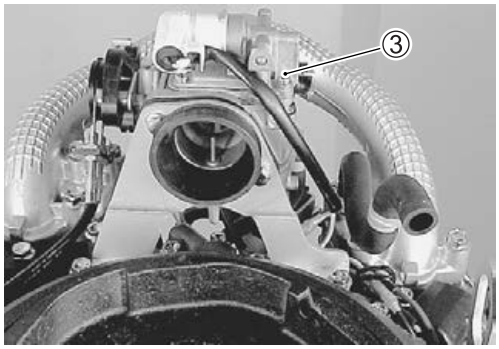

3. Remove the fuel filter ④ from filter bracket ⑤.
   Remove two bolts securing the Rectifier & regulator ⑥.
   Disconnect rectifier lead wire connectors.

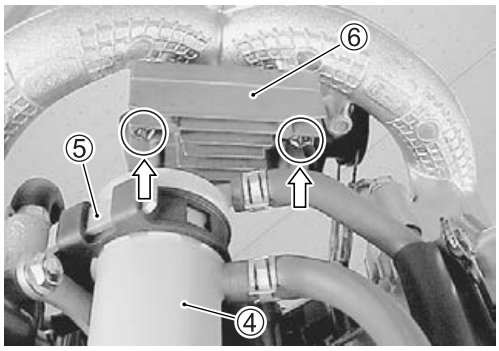

4. Remove bolt ⑧, throttle drum ⑨ (with throttle cables) and throttle cam ⑩.
   Remove two (2) bolts and cable bracket ⑦.

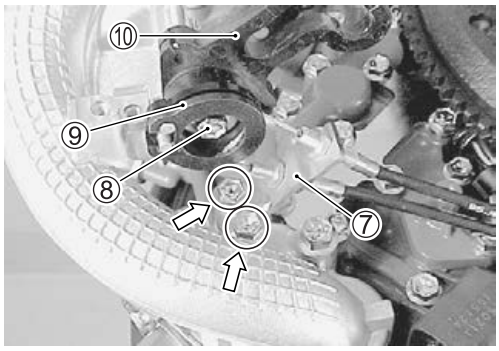

5. Remove six (6) bolts and intake manifold ⑪.

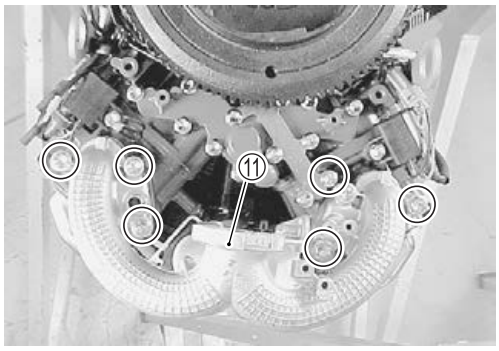

INSTALLATION

Installation is reverse order of removal with special attention to the following steps.

CAUTION

Do not reuse gasket once removed. Always use a new gasket.

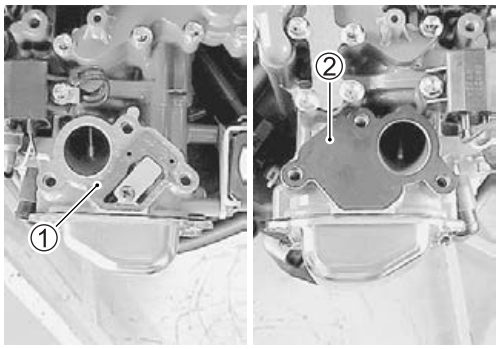

- Install gasket ①·② and intake manifold ③, then tighten bolts securely.

NOTE:
PORT and STBD intake manifold gasket differ in shape as shown figure.

Intake manifold bolt: 25 N·m (2.5 kg-m, 18.1 lb-ft)

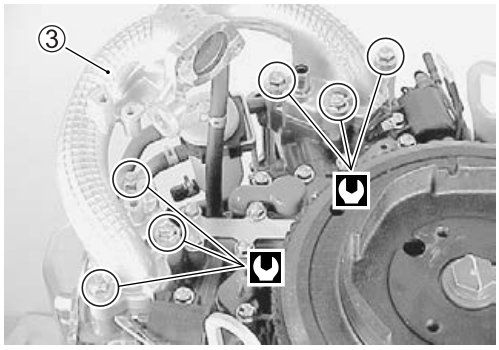

- Install carburetor assembly. (See page 5-5.)
- Check to ensure that all removed parts are back in place.

Checking

- Check fuel hose routing. (See page 10-9 to 10-10.)
- Check wire routing. (See page 10-5 to 10-8.)
- No fuel leakage is evident when fuel system is pressurized. (See page 5-3.)

POWER UNIT
REMOVAL

Before removing power unit:
- **Drain engine oil.**
- **Disconnect battery cable from battery.**
- **Remove both side lower covers. (See page 8-2.)**

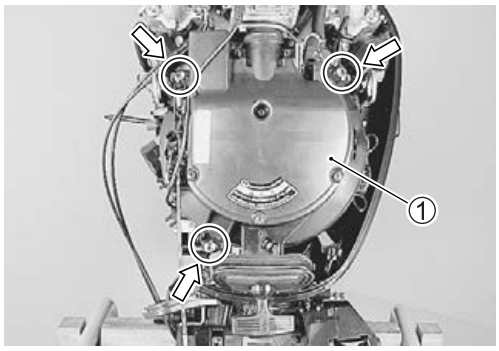

On the manual start model:
Remove the recoil starter ①. (See page 6-2.)

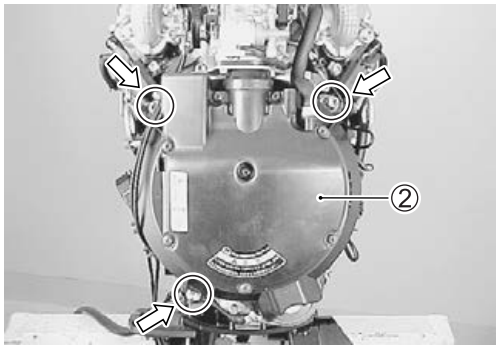

On the electric start model:
Remove the flywheel cover ②. (See page 7-2.)

Remove the carburetor assembly ③. (See page 5-4.)

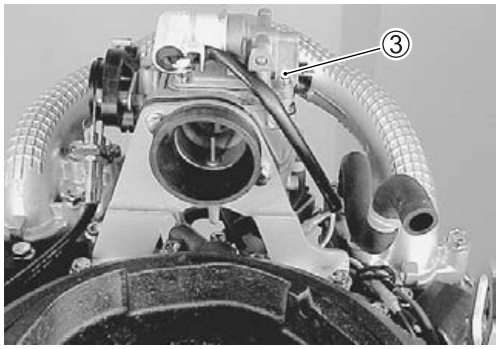

Remove the intake manifold ④. (See page 7-3.)

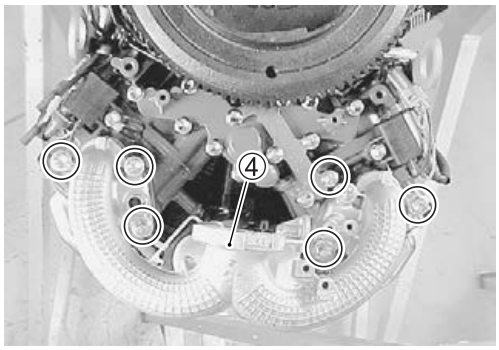

Remove the two (2) bolts and filter bracket ⑤.

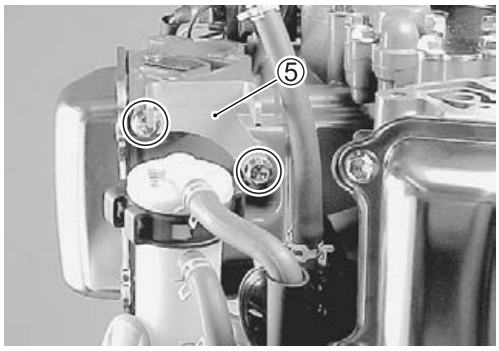

Remove the two (2) bolts and fuel pump ⑥.
Note the position of pump rod ⑦ before removing rod. (See page 5-13.)

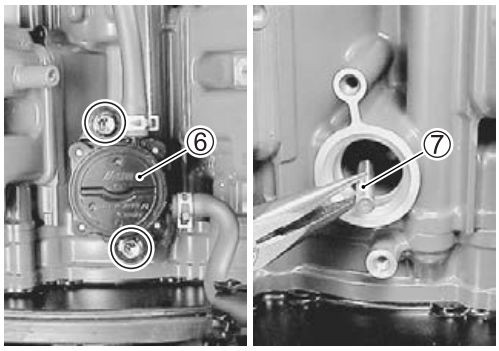

Remove all spark plugs.
Remove the eight (8) cylinder head cover bolts, and then STBD/PORT cylinder head covers ①, ②.

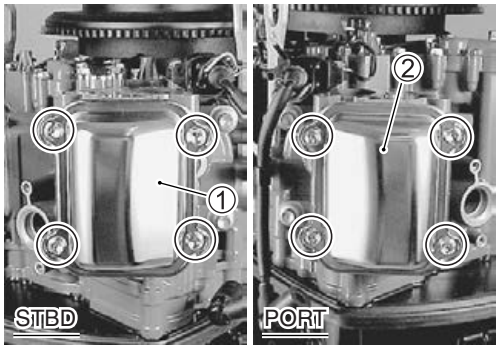

Remove the bolts and two (2) ignition coils ③, ④, then disconnect primary lead wire connectors.

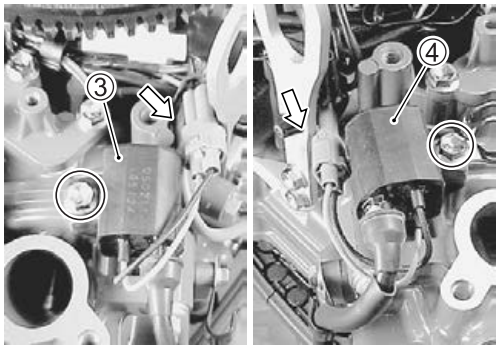

Disconnect the cylinder temp. sensor lead wire connector ⑤.
Disconnect engine stop switch lead wire connector ⑥.
Disconnect neutral switch lead wire connector ⑦.
Remove the bolt and lead wire clamp ⑧.
Loosen screw ⑨ and disconnect oil pressure switch lead wire.

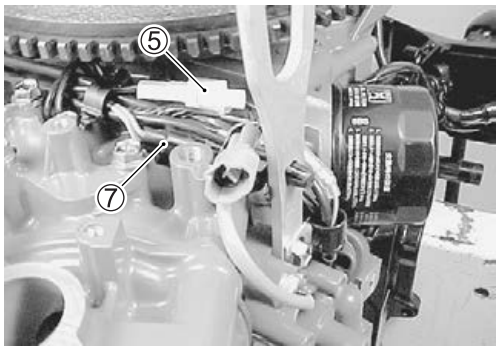

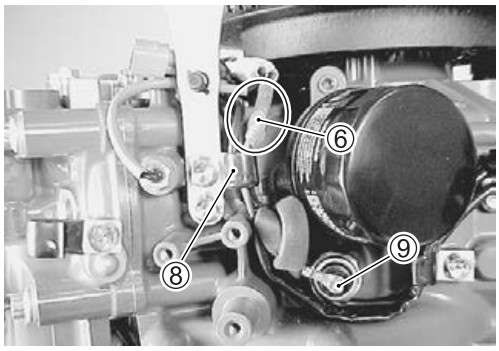

Disconnect all engine wiring harness connectors from CDI unit ⑩, then remove CDI unit from electric parts holder.

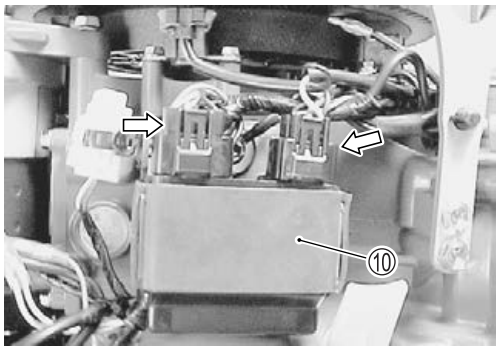

Remove the flywheel ①. (See page 3-16.)

TOOL 09930-48720: Flywheel holder
09930-49210: Flywheel holder attachment
09930-39411: Flywheel remover
09930-39420: Flywheel remover bolt

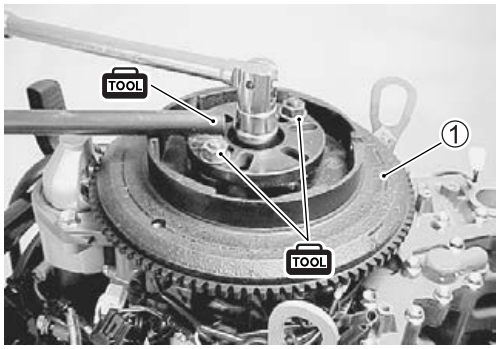

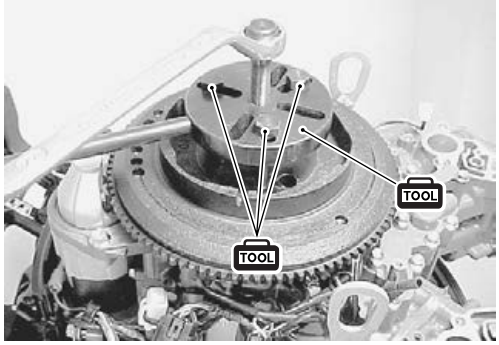

Remove battery charge & power source coil ②. (See page 3-17.)

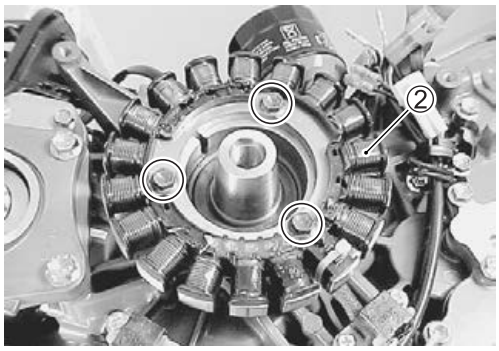

Remove bolts and two (2) CKP sensors ③. (See page 3-17.)

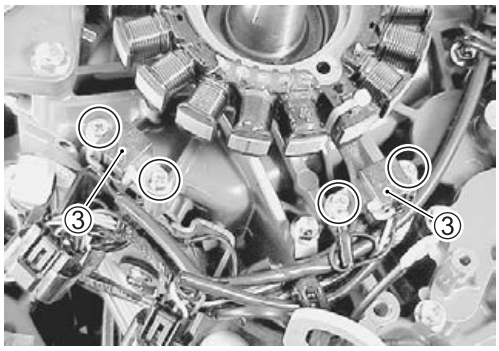

Remove the two (2) bolts and electric parts holder ④.

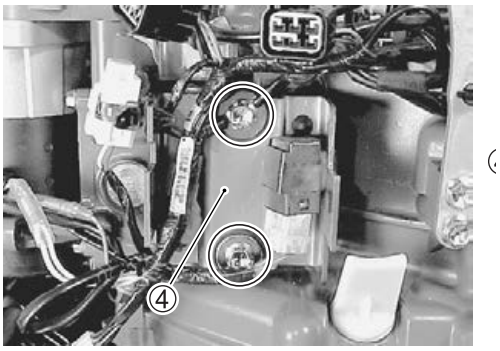

Remove bolts, starter motor bracket ⑤ and starter motor ⑥. (See page 4-13.)

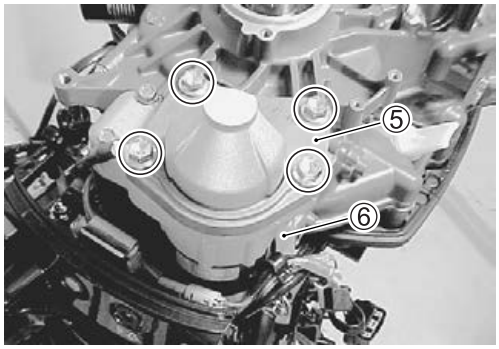

Remove the bolts and lead wire clamps ⑦.

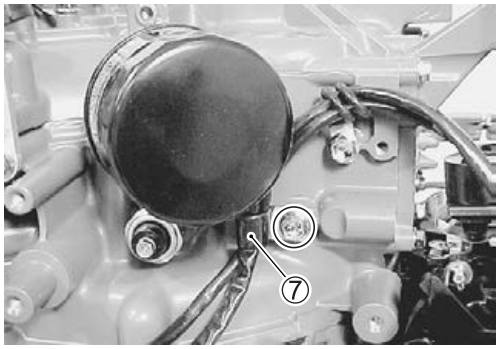

Remove the twelve (12) bolts and two (2) nuts.
Remove the two (2) bolts securing front panel to crankcase.
Lift up and remove power unit from oil pan.

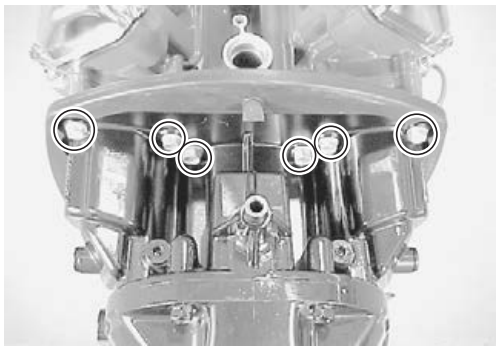

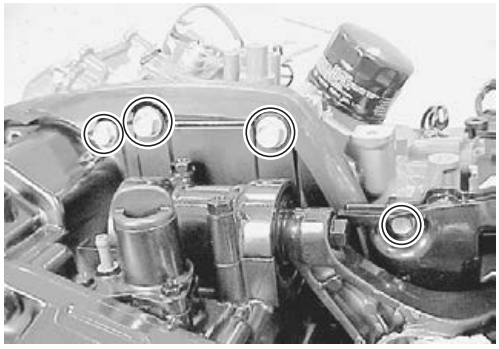

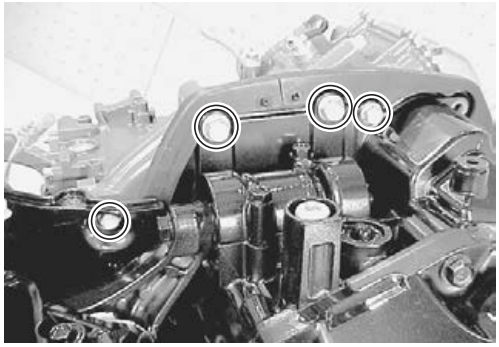

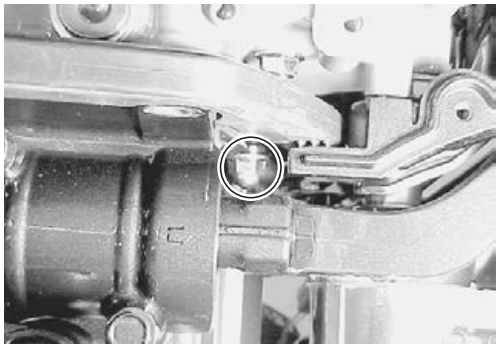

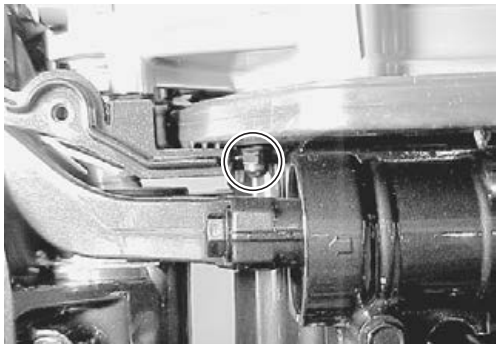

Loosen the clamp and remove the oil strainer ⑧.

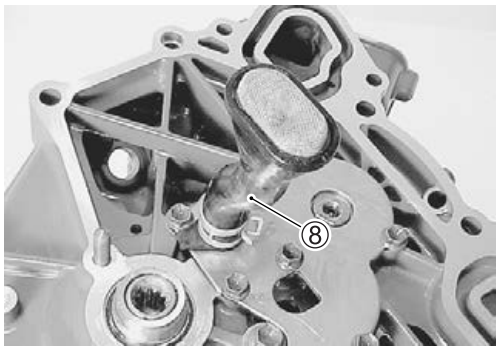

INSTALLATION

Installation is reverse order of removal with special attention to the following steps.

CAUTION

Do not reuse gasket.
Always replace with new parts.

POWER UNIT

Install oil strainer ①, then secure it with clamp ②.

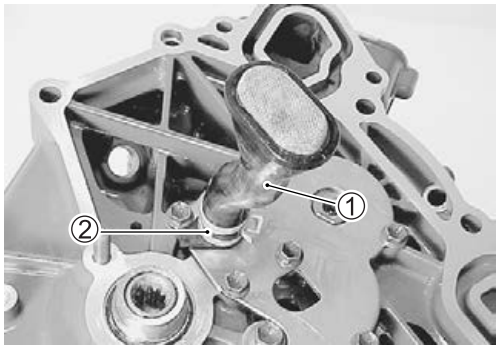

Install the two (2) dowel pins ③ and gasket ④.
Apply Suzuki Water Resistant Grease to driveshaft splines.

W/R G's 99000-25160: SUZUKI WATER RESISTANT GREASE

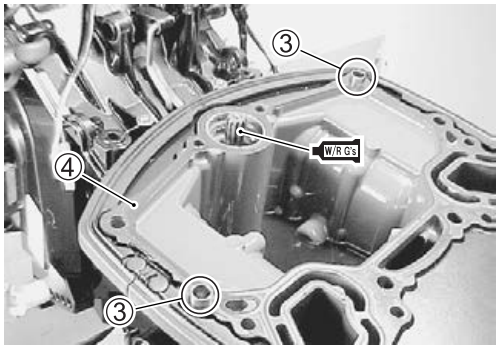

Install the two (2) dowel pins ⑤ to front panel.

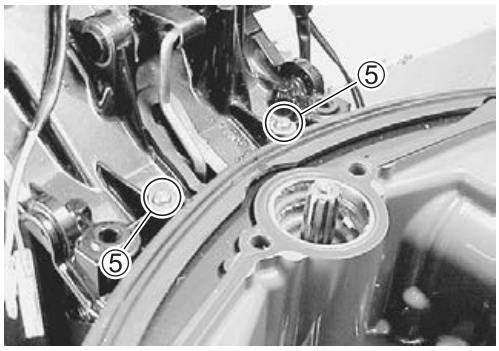

Lower the power unit onto oil pan.

NOTE:
Rotate the crankshaft to aid alignment of driveshaft and crankshaft splines.

Apply Suzuki silicone Seal to power unit mounting bolts and tighten bolts to specified torque.

Si SEAL 99000-31120: SUZUKI SILICONE SEAL

Power unit mounting bolt:

8 mm 23 N·m (2.3 kg-m, 16.5 lb-ft)
10 mm 50 N·m (5.0 kg-m, 36.0 lb-ft)

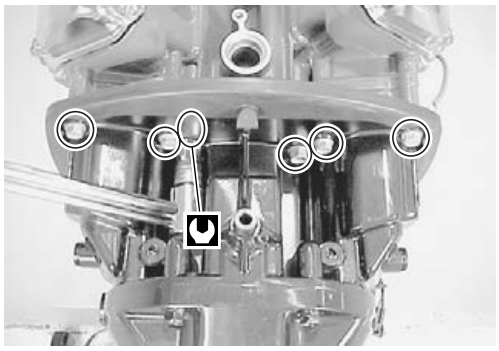

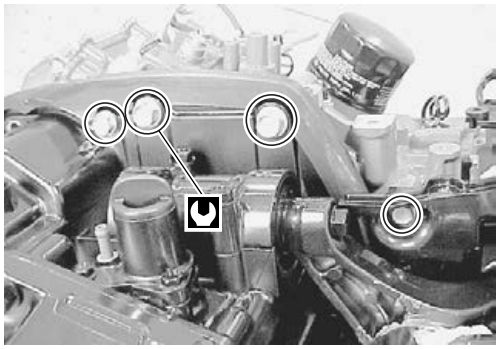

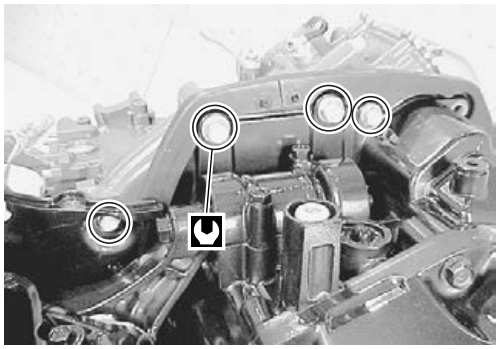

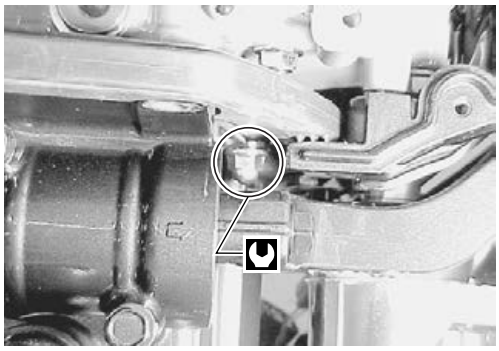

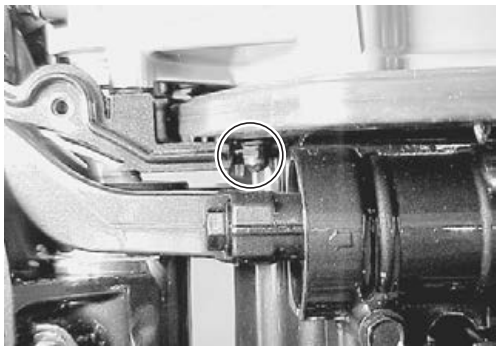

STARTER MOTOR

Install starter motor ①, then tighten motor mounting bolts securely. (See page 4-14.)

Starter motor mounting bolt: 23 N·m (2.3 kg-m, 16.5 lb-ft)

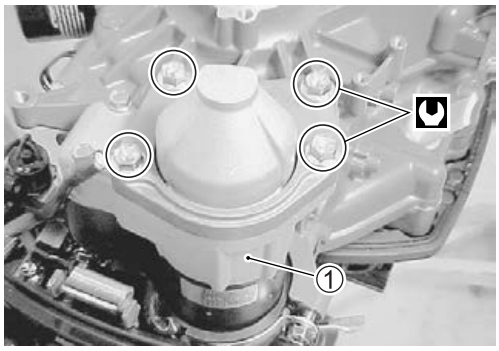

FLYWHEEL

Install battery charge & power source coil ②. (See page 3-18.)
Install CKP sensors ③. (See page 3-18.)

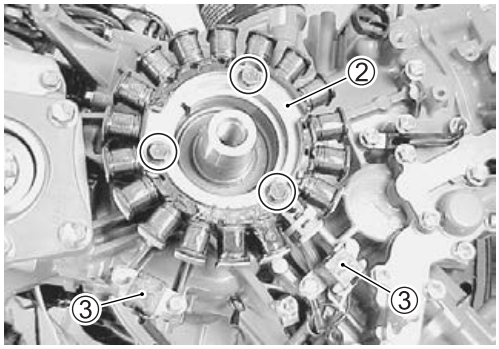

Install flywheel and tighten flywheel bolt to specified torque. (See page 3-18.)
Apply engine oil to flywheel bolt and washer before installing.

09930-48720: Flywheel holder
09930-49210: Flywheel holder attachment

Flywheel bolt: 196 N·m (19.6 kg-m, 142.0 lb-ft)

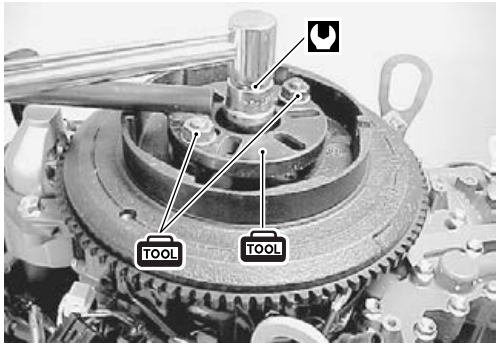

CYLINDER HEAD COVER

NOTE:
Before installing cylinder head cover, check valve clearance. (See page 2-9.)

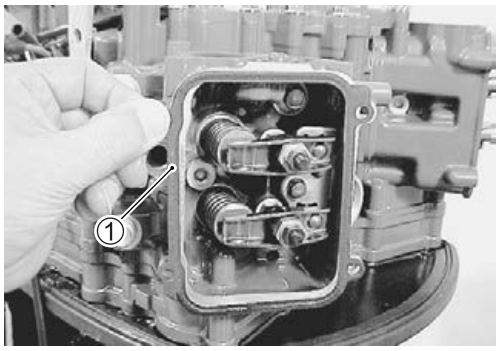

Install cylinder head cover gasket ① and cylinder head cover ② to cylinder head and tighten cover bolts to specified torque.

Cylinder head cover bolt: 10 N·m (1.0 kg-m, 7.2 lb-ft)

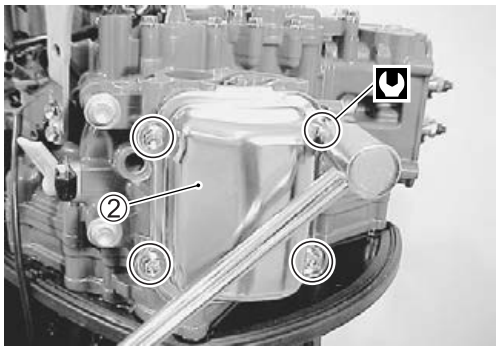

INTAKE MANIFOLD

Install the intake manifold. (See page 7-4.)

CARBURETOR

Install the carburetor. (See page 5-5.)

FINAL ASSEMBLY CHECK

Perform the following checks to ensure proper and safe operation of the repaired unit.

- All parts removed have been returned to their original positions.
- Fuel hose routing match's service manual illustration. (See page 10-9 to 10-10.)
- Wire routing match's service manual illustration. (See page 10-5 to 10-8.)
- No fuel leakage is evident when fuel system is pressurized. (See page 5-3.)
- No water leakage is evident during final test running.

OIL PUMP

DISASSEMBLY

1. Remove the power unit. (See page 7-5 to 7-9.)
2. Remove the seven (7) bolts securing oil pump rotor plate ① to cylinder block, then remove the oil pump rotor plate.

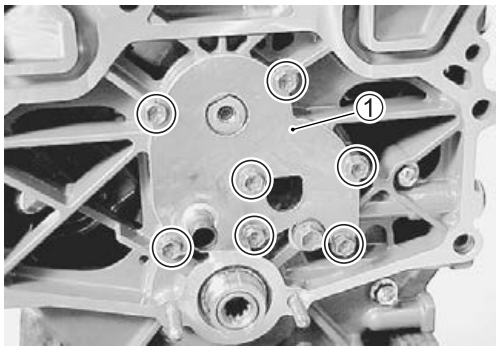

3. Take out inner rotor ② and outer rotor ③.

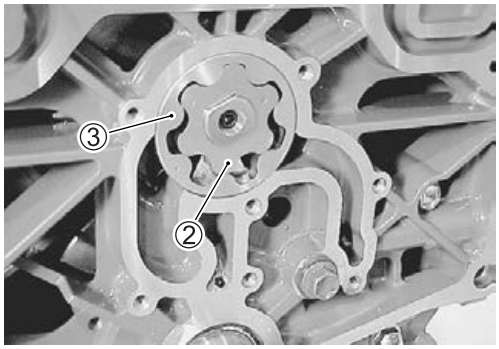

INSPECTION

- Check outer and inner rotors, rotor plate for excessive wear or damage. Replace as necessary.

- Check oil pump case for excessive wear or damage. Replace as necessary.

ASSEMBLY

Assembly is reverse order of disassembly with special attention to the following steps.

- Wash, clean and then dry all disassembled parts.
- Apply thin coat of engine oil to inner and outer rotors, inside surfaces of oil pump case and plate.
- Install outer ① and inner rotor ② to pump case.

NOTE:
When installing outer and inner rotors, the punch mark (○, △) *on each rotor must face rotor plate.*

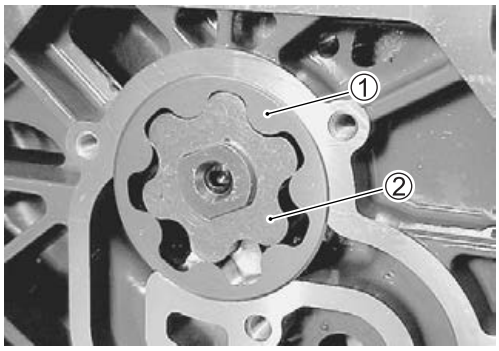

- Install rotor plate ③, and then tighten seven (7) bolts securely.

Oil pump rotor plate bolt: 10 N·m (1.0 kg-m, 7.2 lb-ft)

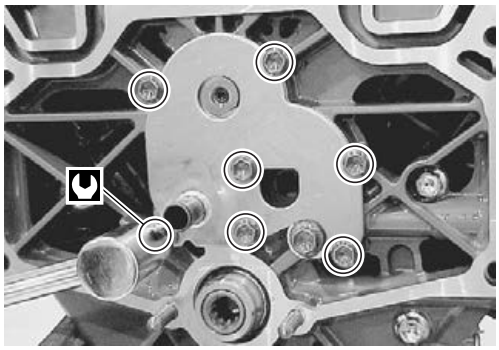

CYLINDER HEAD ASSEMBLY

(Cylinder head/valve)

REMOVAL

Prior to removing cylinder head:

- **Remove the power unit. (See page 7-5 to 7-9.)**

1. Remove bolts and starter motor band ①.

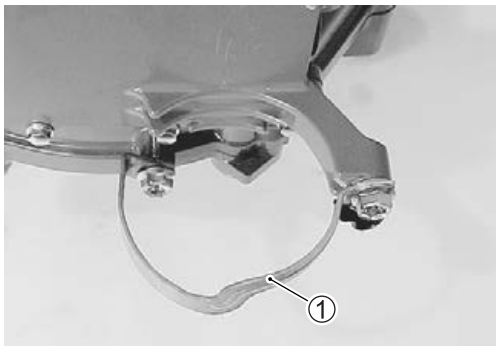

2. Remove eight (8) bolts and crankcase front plate ②.

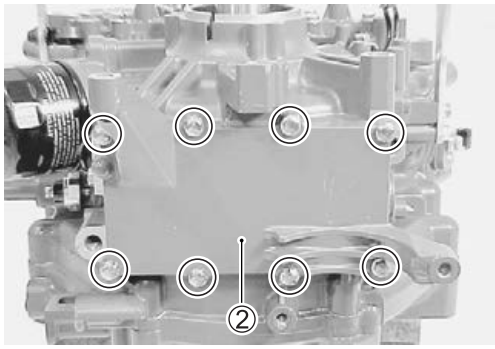

3. Remove the seven (7) bolts securing oil pump rotor plate ③ to cylinder block, then remove the oil pump rotor plate.

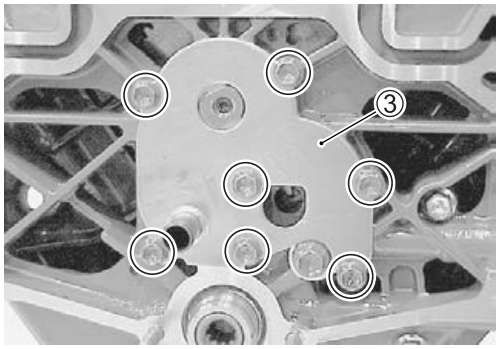

4. Take out inner rotor ④ and outer rotor ⑤.

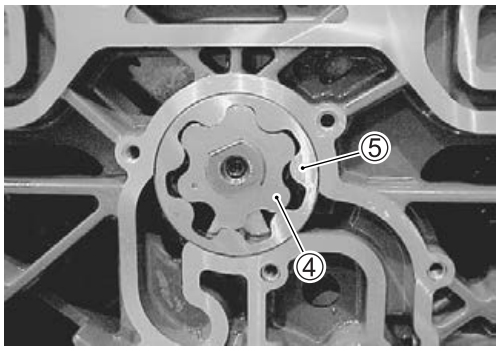

5. Loosen and remove the valve adjusting lock nuts ①, then remove all pivot nuts ② and rocker arms ③.

NOTE:

- *To prevent valve damage, remove the rocker arms before removing bottom half of crankcase.*
- *Reassemble each rocker arm to its original position.*

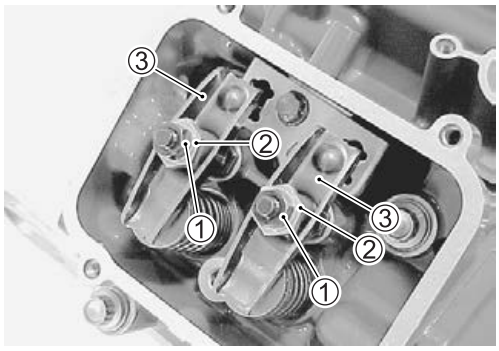

6. Remove all push rods ④.
   Remove the screws and push rod guide ⑤.

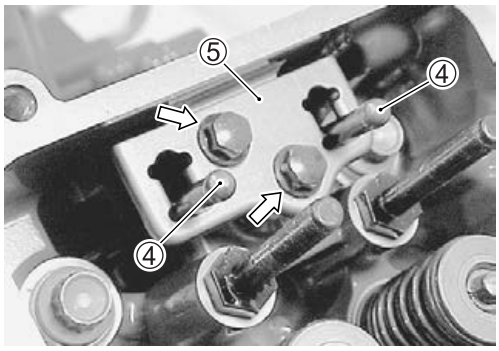

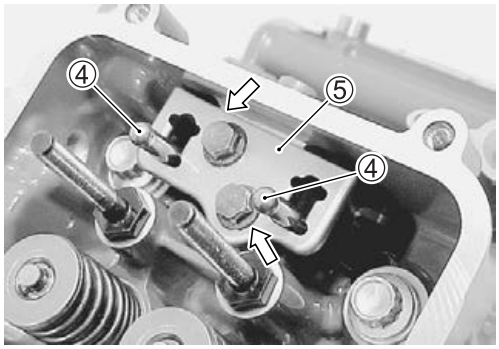

7. Remove the thirteen (13) bolts securing thermostat cover ①, then remove the thermostat cover ① and oil gallery plate ②.

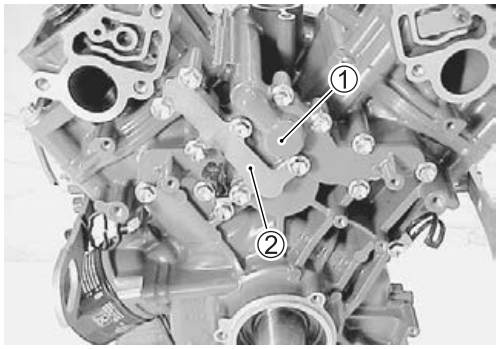

8. Take out the thermostat ③.

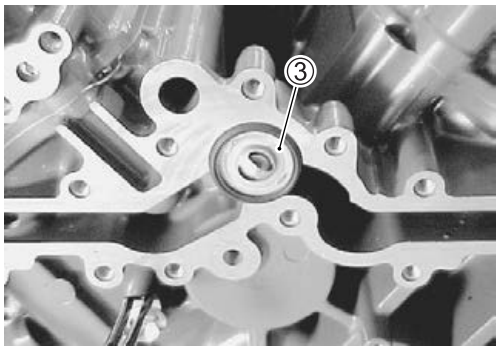

9. Remove the idle gear shaft nut ① and washer.
10. Loosen and remove two stud bolts ② from bottom crankcase.

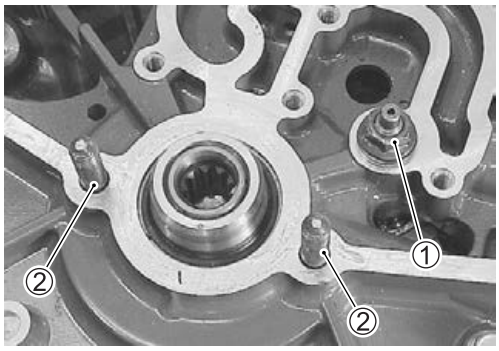

11. Remove the four (4) bolts ③ securing bottom crankcase ④.

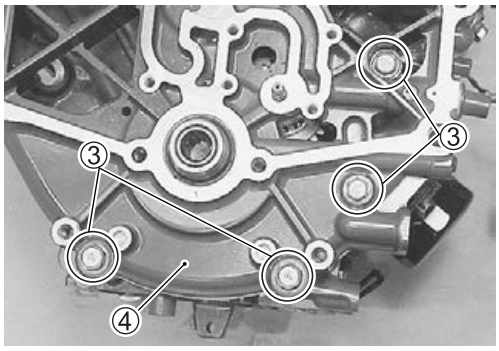

12. Place the special tool (spacer) onto crankshaft as shown.
    Set the special tool as shown, then lift up and remove the bottom crankcase ④ by turning bolt ⓐ.

TOOL 09910-99510: Crankshaft remover

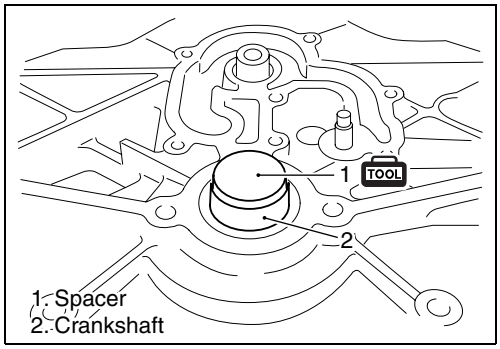

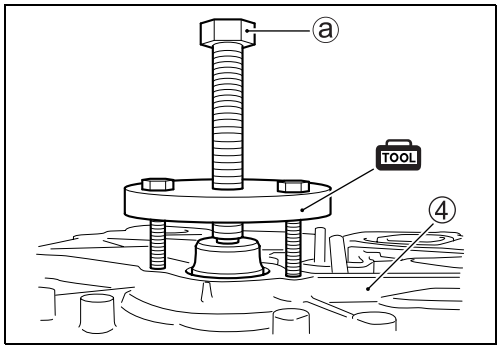

13. On the STBD side bank:
    - Loosen and remove four (4) cylinder head bolts in the order indicated in figure.
      Remove cylinder head assembly and head gasket.

NOTE:
Use a special tool (10 mm deep socket wrench) when loosening the cylinder head bolts.

TOOL 09919-16010: Deep socket wrench (10 mm)

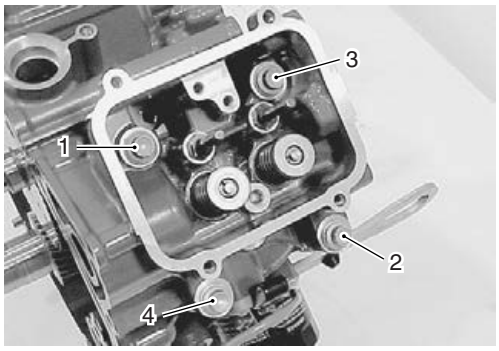

14. On the PORT side bank:
    - Loosen and remove four (4) cylinder head bolts in the order indicated in figure.
      Remove cylinder head assembly and head gasket.

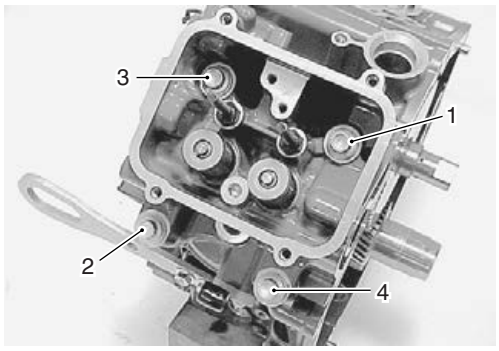

ASSEMBLY

Assemble in reverse order of removal paying special attention to the following steps.

CAUTION

Do not reuse gasket. Always use a new gasket.

CYLINDER HEAD ASSEMBLY

1. Insert the dowel pins ① and place a new cylinder head gasket ② into position on the cylinder.

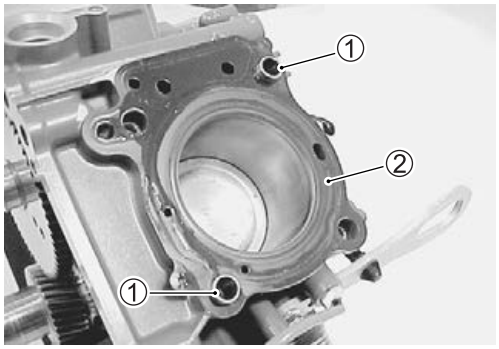

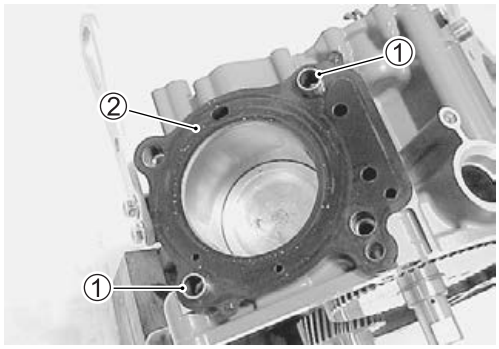

2. Position cylinder head ③ on cylinder.
3. Apply engine oil to cylinder head bolts and tighten them gradually as follows.
   (a) Tighten all bolts to 50 percent (%) of specified torque according to sequence in figure.

Cylinder head bolt:
1st step 28 N·m (2.8 kg-m, 20.2 lb-ft)

   (b) Loosen all bolts to 0 N·m (0 kg-m, 0 lb-ft) according to reverse sequence in figure.

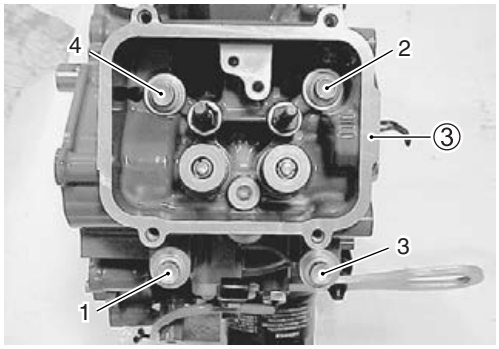

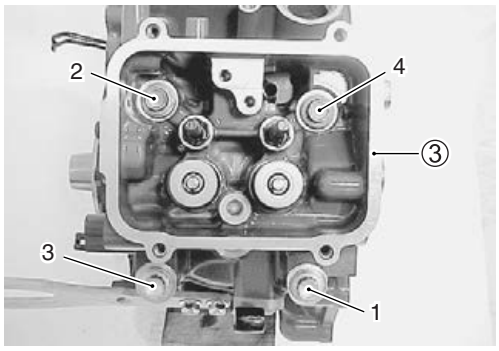

(c) Again tighten all bolts to 50 percent (%) of specified torque according to sequence in figure.

Cylinder head bolt:
3rd step 28 N·m (2.8 kg-m, 20.2 lb-ft)

(d) Finally tighten all bolts to specified torque according to sequence in figure.

Cylinder head bolt:
Final step 55 N·m (5.5 kg-m, 39.8 lb-ft)

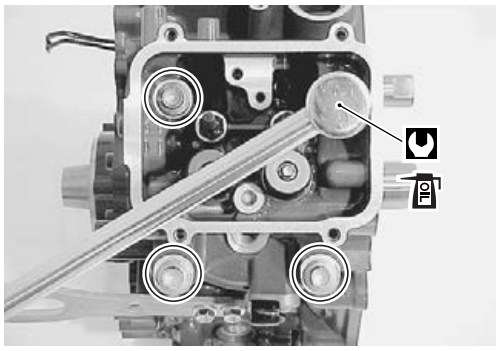

BOTTOM CRANKCASE

1. Place dowel pins ① and gasket ② into position.
2. Install idle gear ③.

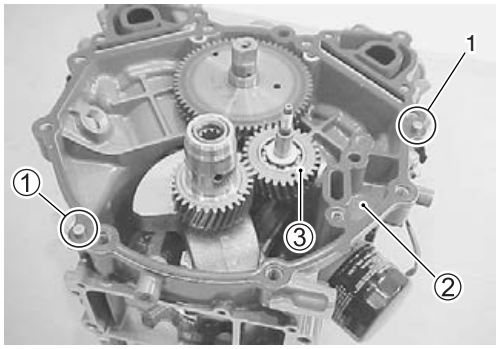

3. Install the bottom crankcase to cylinder, then secure it with bolts.
   For bottom crankcase installation, see the "CYLINDER/CRANKSHAFT" assembling section on page 7-52.

NOTE:
Before installing bottom crankcase to cylinder, make sure the timing marks are aligned.

09917-29510: Scissors gear alignment pin set

Crank case bolt:
8 mm 23 N·m (2.3 kg-m, 16.6 lb-ft)
10 mm 50 N·m (5.0 kg-m, 36.2 lb-ft)

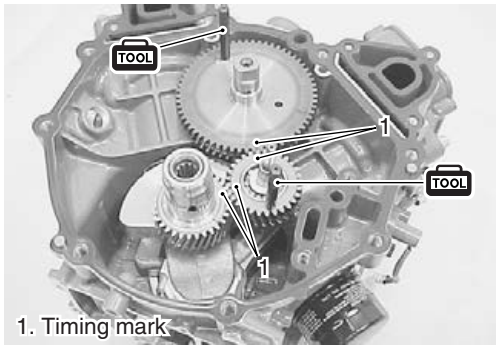

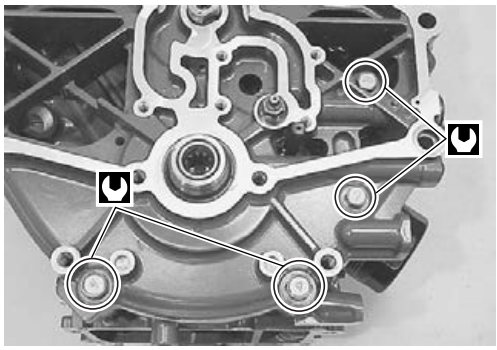

ROCKER ARM

1. Install push rod guide ① and screws ②, then tighten screws securely.
2. Install push rods ③.

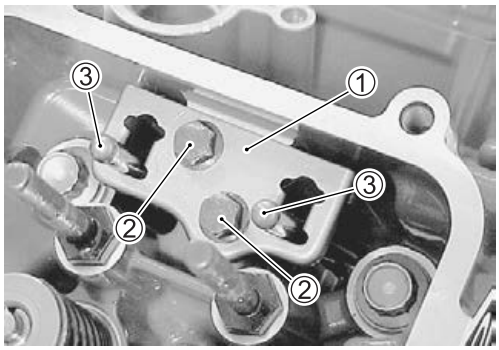

3. Install rocker arms ④, pivot nuts ⑤ and valve adjusting lock nuts ⑥ onto pivot bolts.

NOTE:
Reassemble each rocker arm to its original position.

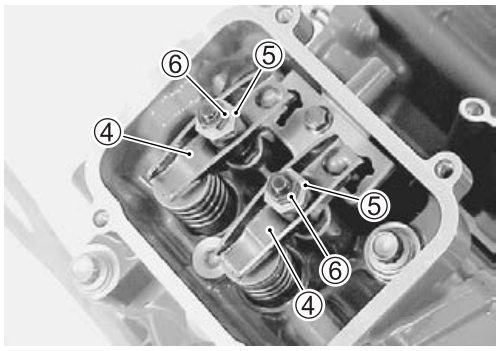

4. Adjust valve clearance.

OIL PUMP

Install oil pump component. (See page 7-15.)

DISASSEMBLY

1. Using valve lifter and attachment, remove valve cotters ① while compressing valve spring.

TOOL 09916-14510: Valve lifter
09916-14521: Attachment
09916-84511: Tweezers

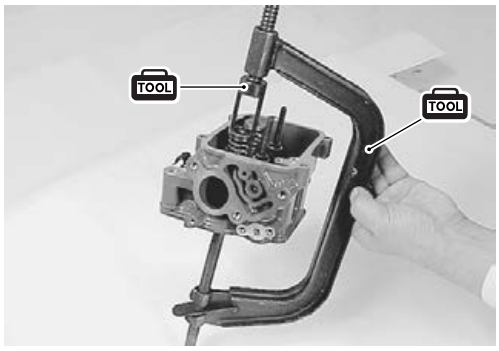

2. Remove valve spring retainer ②, valve spring ③ and valve ④.

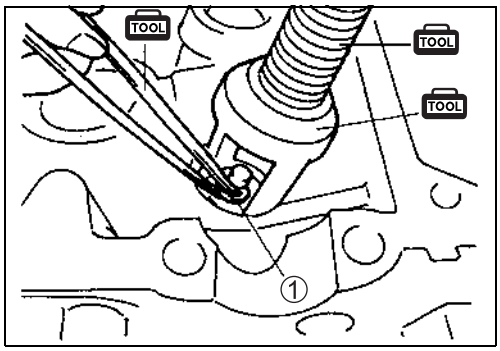

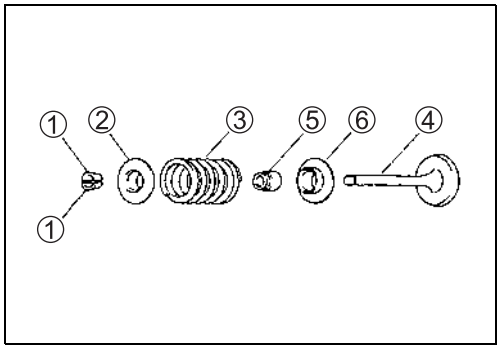

3. Remove valve stem seal ⑤ and valve spring seat ⑥.

NOTE:
Reassemble each valve and valve spring in their original positions.

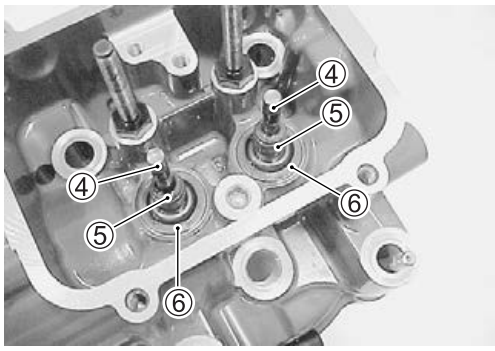

4. Remove the rocker arm pivot bolts ⑦.

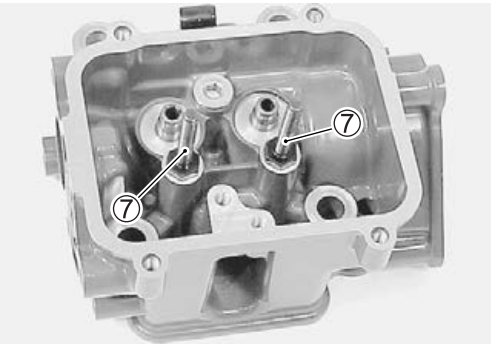

INSPECTION/SERVICING

NOTE:
If cracks, excessive wear or other damage is found on any component, replace component.

CYLINDER HEAD
Remove all carbon from combustion chambers.

NOTE:
- *Do not use any sharp edged tool to scrape carbon off cylinder head or its components.*
- *Be careful not to scuff or nick metal surfaces when decarboning.*

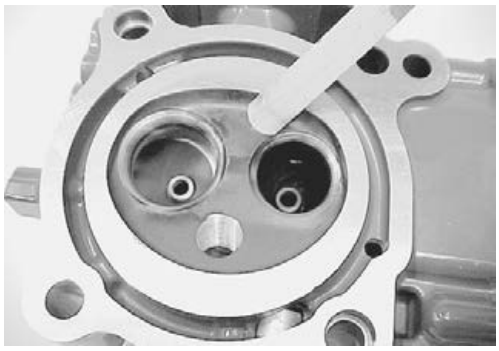

Check cylinder head for cracks in intake and exhaust ports, combustion chambers, and head surface.

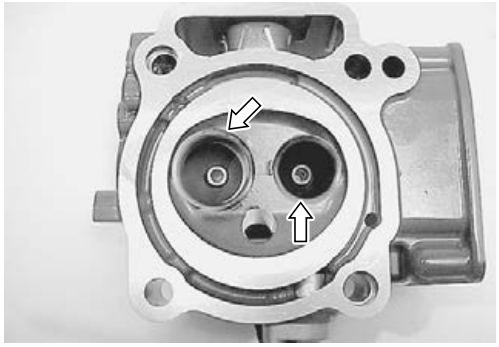

Valve seat
Check valve seat, if cracks or other damage is found, replace cylinder head.

Cylinder head distortion
Using a straightedge and thickness gauge, measure cylinder head distortion (gasket surface) at a total of six (6) locations as shown.

TOOL 09900-20803: Thickness gauge

Cylinder head distortion
Service limit: 0.05 mm (0.002 in)

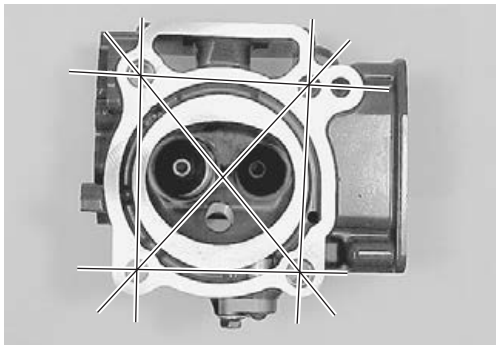

If measurement exceeds service limit, resurface or replace cylinder head.

NOTE:
Cylinder head can be resurfaced, using a surface plate and #400 grit wet sandpaper.
Move the cylinder head in a figure eight pattern when sanding.

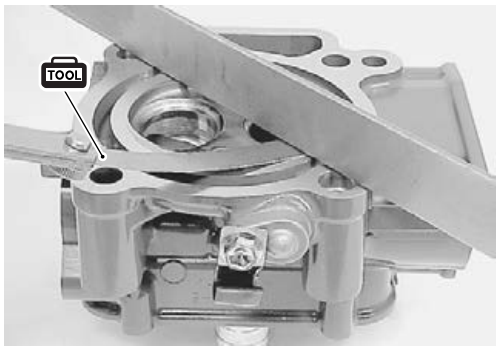

Water jackets

Check water jackets. If clogged or obstructed, clean water jackets.

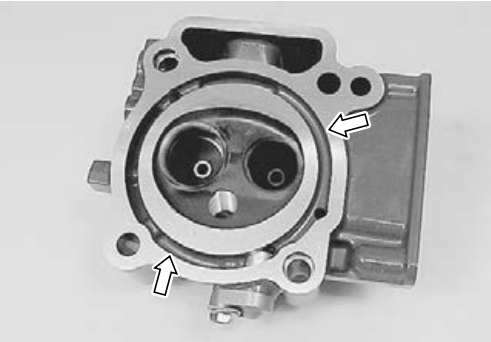

ROCKER ARM/PUSH ROD

- Inspect rocker arm. Replace if cracked, distorted or other abnormal condition.
- Inspect push rod. Replace if bent or worn.

VALVE/VALVE GUIDE

Valve guide to valve stem clearance

Using a micrometer and bore gauge, take diameter readings on valve stems and guides to check guide to stem clearance.

Be sure to take readings at more than one place along the length of each stem and guide.

TOOL 09900-20205: Micrometer

Valve stem outside diameter

Using micrometer, measure valve stem outside diameter.

Valve stem outside diameter
Standard:
IN. 5.465 – 5.480 mm (0.2152 – 0.2157 in)
EX. 5.450 – 5.465 mm (0.2146 – 0.2152 in)

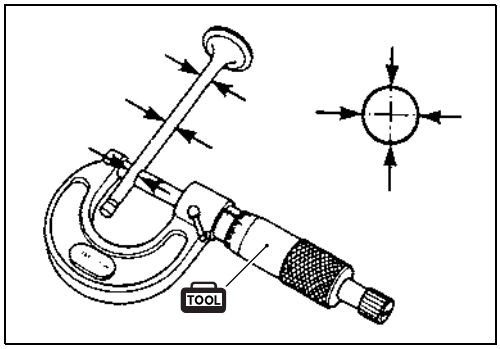

Valve guide inside diameter

Using a small bore gauge, measure valve guide inside diameter.

Valve guide inside diameter
Standard:
IN. 5.500 – 5.512 mm (0.2165 – 0.2170 in)
EX. 5.500 – 5.512 mm (0.2165 – 0.2170 in)

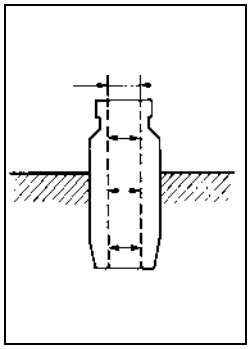

Valve guide to valve stem clearance

Valve guide to valve stem clearance

Standard:

IN. 0.020 – 0.047 mm (0.0008 – 0.0019 in)

EX. 0.035 – 0.062 mm (0.0014 – 0.0024 in)

Service limit:

IN. 0.070 mm (0.0028 in)

EX. 0.090 mm (0.0035 in)

If measurement exceeds service limit, replace valve and/or valve guide.

NOTE:
For valve guide replacement, see "VALVE GUIDE REPLACEMENT" section on page 7-28.

Valve stem deflection

If unable to measure valve guide inside diameter, check "Valve stem deflection".

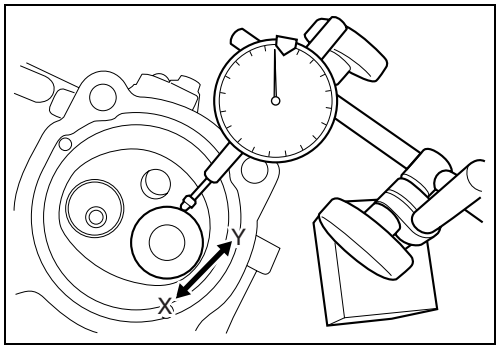

TOOL **09900-20602: Dial gauge**
09900-20701: Magnetic stand

Measure valve stem deflection as follows:

(1) Install valve into valve guide.
(2) Position valve head at approx. 5 mm away from valve seat.
(3) Move valve head in the direction "X – Y", and measure deflection.

Valve stem deflection

Service limit:

IN. 0.14 mm (0.006 in)

EX. 0.18 mm (0.007 in)

If measurement exceeds service limit, replace valve.
If measurement still exceeds service limit with new valve, replace valve guide.

Valve stem end

Inspect valve stem end face for pitting and wear.
If pitting or wear is found, valve stem end may be resurfaced.
Use caution when resurfacing, do not grind away stem end chamfer.
When chamfer has been worn away, replace valve.

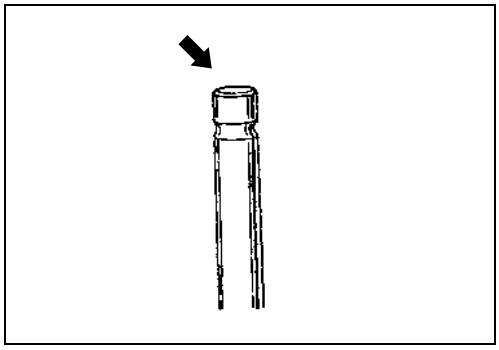

Valve stem runout

Measure valve stem runout.

TOOL 09900-20602: Dial gauge
09900-20701: Magnetic stand
09900-21304: "V" block set

Valve stem runout
Service limit: 0.05 mm (0.002 in)

If measurement exceeds service limit, replace valve.

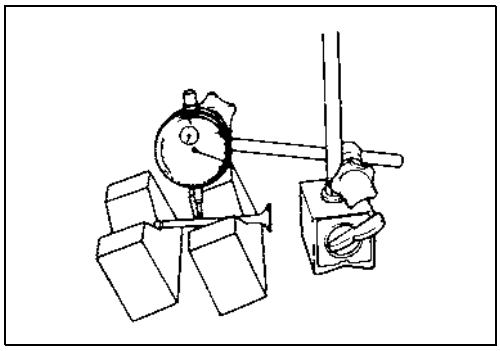

Valve head radial runout

Measure valve head radial runout.

TOOL 09900-20602: Dial gauge
09900-20701: Magnetic stand
09900-21304: "V" block set

Valve head radial runout
Service limit: 0.08 mm (0.003 in)

If measurement exceeds service limit, replace valve.

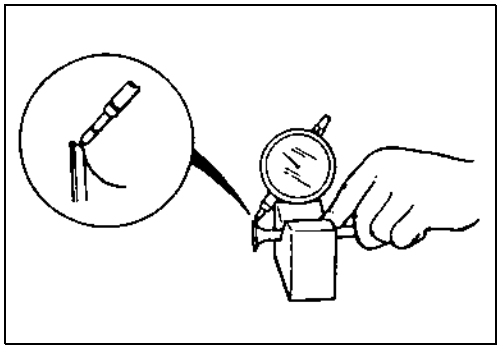

Valve head thickness

Measure thickness Ⓣ of valve head.

TOOL 09900-20101: Vernier calipers

Valve head thickness
Standard:
IN. 1.0 mm (0.0394 in)
EX. 1.0 mm (0.0394 in)
Service limit:
IN. 0.5 mm (0.0197 in)
EX. 0.5 mm (0.0197 in)

If measurement exceeds service limit, replace valve.

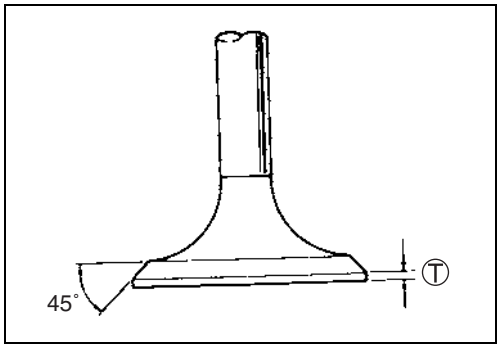

Valve seat contact width

Measure valve seat contact width as follows:

(1) Remove all carbon from valve and seat.
(2) Coat valve seat evenly with Prussian blue (or equivalent).
(3) Install valve into valve guide.
(4) Put valve lapper on valve.

TOOL 09916-10911: Valve lapper

(5) Rotate valve while gently tapping valve contact area against seat.
(6) Continuously pattern on valve seating face with Prussian blue.
(7) Measure valve seat contact width Ⓐ.

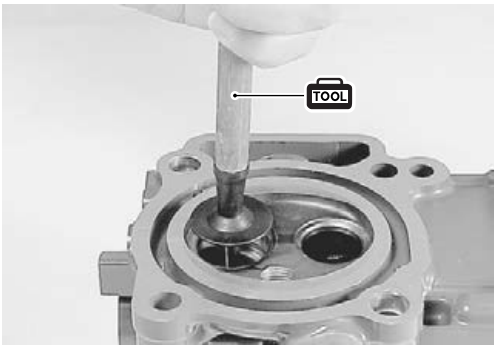

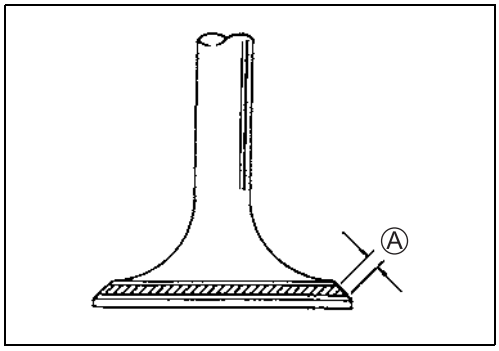

TOOL 09900-20101: Vernier calipers

Valve seat contact width Ⓐ
Standard:
IN., EX. 1.1 – 1.3 mm (0.04 – 0.05 in)

If measurement exceeds specification, repair valve seat.

NOTE:
For valve seat repair, see "Valve seat servicing" section on page 7-27.

VALVE SEAT SERVICING

If valve seat contact width is out of specification, reface valve seat as follows:

- **Valve seat angle**
  Intake side : 30°, 45°, 60°
  Exhaust side : 30°, 45°, 75°

TOOL 09916-20630: Valve seat cutter (NEWAY126) 30°
: Valve seat cutter (NEWAY128) 30° × 45°
09916-20620: Valve seat cutter (NEWAY122) 45°
09916-22420: Valve seat cutter (NEWAY114) 60°
: Valve seat cutter (NEWAY125) 75°
09916-24450: Solid pilot (NEWAY. N-100-5.52)
09916-54910: Handle (N-505)

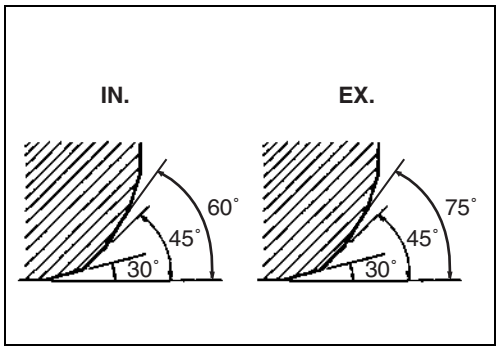

NOTE:
Turn cutter clockwise, never counterclockwise.

(1) Remove all carbon from valve and valve seat.
(2) Using 45° angle cutter, reface valve seat.
(3) Check valve seat contact width Ⓐ.
See the "Valve seat contact width" section on page 7-26.

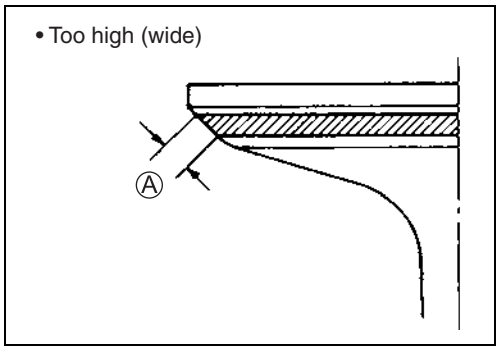

(4) • If width Ⓐ is too high (or wide), reface valve seat using 30° angle cutter.
• If width Ⓐ is too low (or narrow):
  • reface valve seat using 60° angle cutter. (Intake side)
  • reface valve seat using 75° angle cutter. (Exhaust side)

(5) Clean up any burrs using 45° angle cutter very lightly.

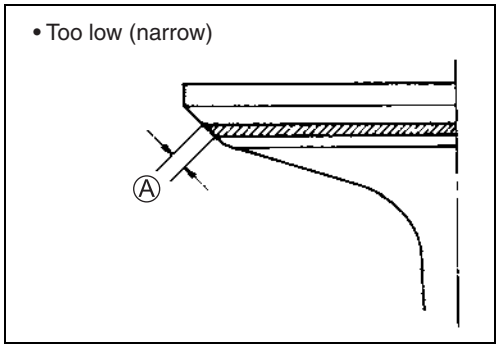

CAUTION

Cut seat areas minimally only.
Do not cut more than necessary.

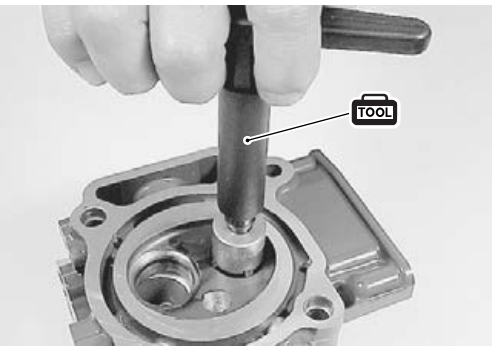

(6) Lap valve on seat in two steps, first with coarse grit lapping compound applied to face and the second with fine grit compound.
(7) Recheck valve seat contact width Ⓐ.

NOTE:
Clean and assemble cylinder head and valve components.
Fill intake and exhaust ports with solvent to check for leaks between valve seat and valve.
If any leaks occur, inspect valve seat and face for burrs or other things that could prevent valve from sealing.

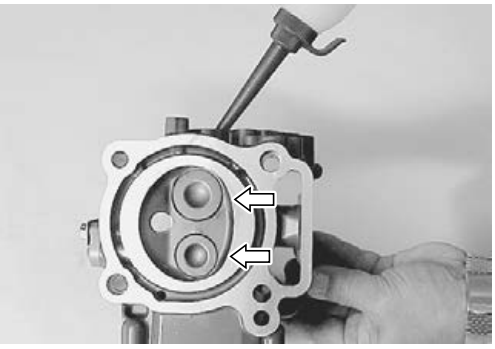

VALVE GUIDE REPLACEMENT

CAUTION

Be careful not to damage cylinder head when replacing valve guide.

(1) Using valve guide remover, drive valve guide out from combustion chamber side towards valve spring side.

TOOL 09916-44310: Valve guide remover

NOTE:
Do not reuse valve guide once it has been removed.
Always use a new valve guide (oversize) when assembling.

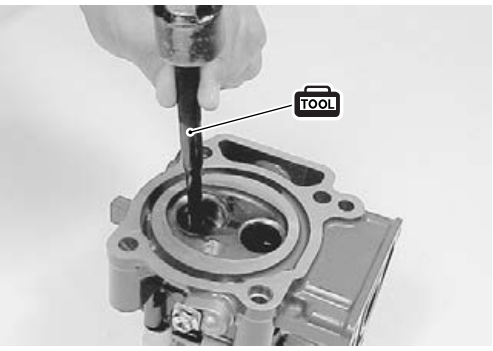

(2) Ream valve guide hole with ϕ10.5 mm reamer to true hole and remove burrs.

TOOL 09916-37320: Valve guide reamer (ϕ10.5 mm)
09916-34542: Reamer handle

NOTE:
Turn reamer clockwise, never counterclockwise.

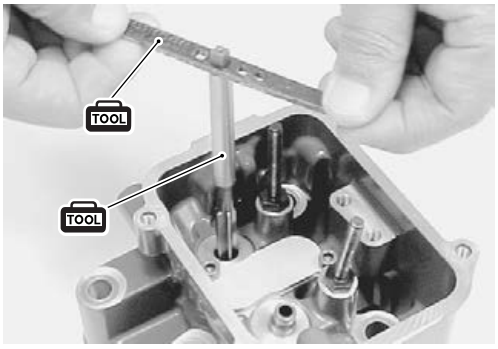

(3) Drive valve guide in from valve spring side to the specified height.
After installing, check valve guide protrusion Ⓗ.

TOOL 09916-44310: Valve guide installer/remover
09900-20101: Vernier calipers

Valve guide protrusion Ⓗ
standard:
IN. 14.2 mm (0.559 in)
EX. 12.5 mm (0.492 in)

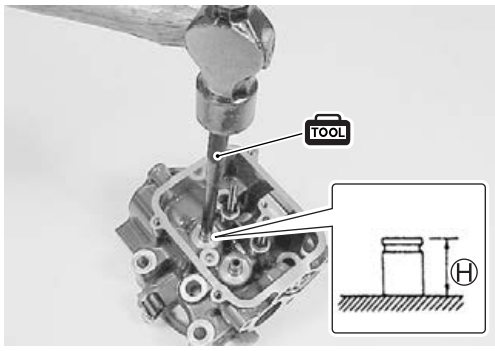

(4) Ream valve guide bore with ϕ5.5 mm reamer.

TOOL 09916-34550: Valve guide reamer (ϕ5.5 mm)
09916-34542: Reamer handle

NOTE:
Clean and oil valve guide bore after reaming.

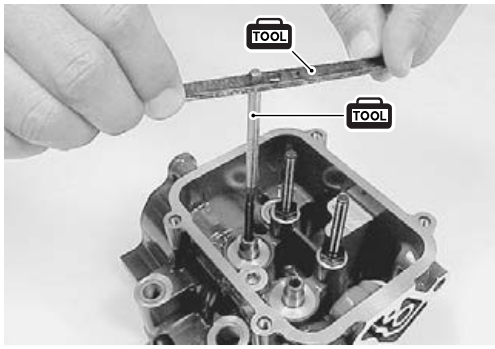

VALVE SPRING
Valve spring free length
Check spring strength by measuring free length.

TOOL 09900-20101: Vernier calipers

Valve spring free length
Standard:
IN. & EX. 40.84 mm (1.608 in)
Service limit:
IN. & EX. 39.21 mm (1.5487 in)

If lower than service limit, replace valve spring.

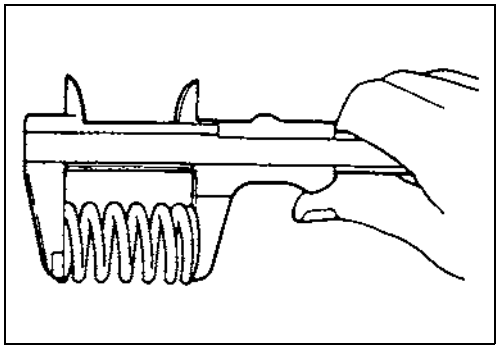

Valve spring preload
Measure valve spring preload.

TOOL 09900-20101: Vernier calipers

Valve spring preload
Standard:
IN. & EX. 111 – 128 N (11.1 – 12.8 kg, 24.5 – 28.2 lbs)
for 31.5 mm (1.24 in)
Service limit:
IN. & EX. 102 N (10.2 kg, 22.5 lbs)
for 31.5 mm (1.24 in)

If lower than service limit, replace valve spring.

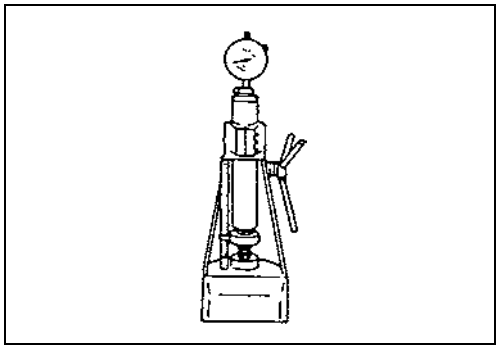

REASSEMBLY

Reassemble in reverse order of disassembly paying special attention to the following steps.

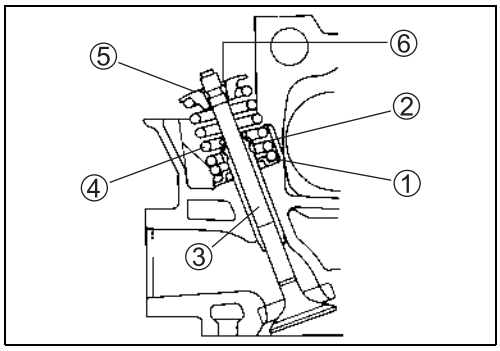

VALVE

Install valve spring seat ① to cylinder head.

Apply engine oil to valve stem seal ②.
Install valve stem seal onto valve guide by pushing with finger tip.
Check to be sure that seal is properly fixed to valve guide.

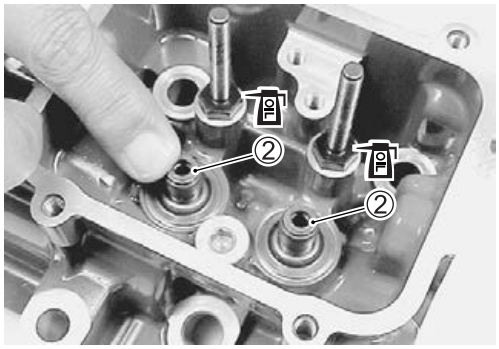

CAUTION

> **Do not reuse stem seal once removed.**
> **Always install new seal.**

Apply engine oil to stem seal, valve guide bore and valve stem.

Install valve ③ to valve guide.

NOTE:
Reassemble each valve and valve spring to their original position.

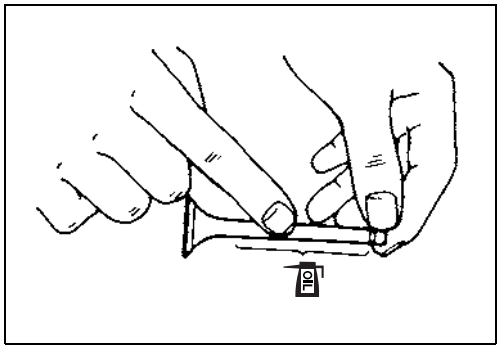

Install valve spring ④, and valve retainer ⑤.

NOTE:
Set valve spring in place with narrow spiral area facing valve seat.

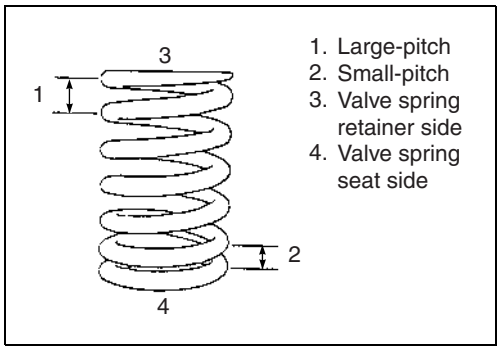

Hold valve spring compressed with special tool and install valve cotters ⑥.

Make sure valve cotters are properly seated in groove Ⓐ.

TOOL 09916-14510: Valve lifter
09916-14521: Attachment
09916-84511: Tweezers

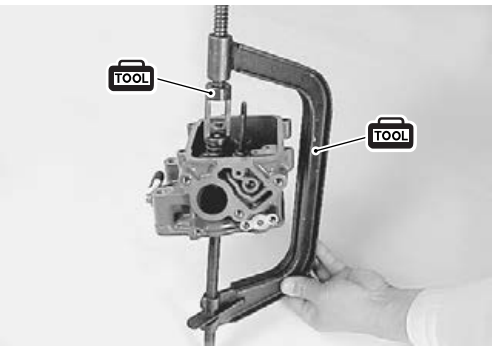

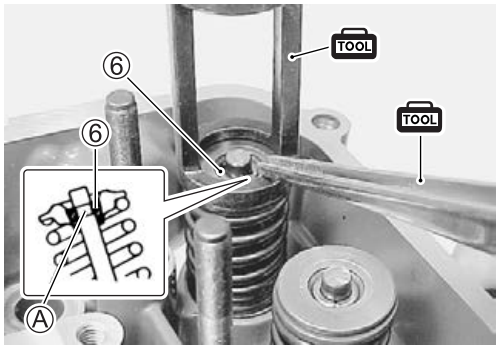

Install the rocker arm pivot bolts ①.
Tighten pivot bolts, pre-coated with thread lock, to specified torque.

Rocker arm pivot bolt: 23 N·m (2.3 kg-m, 16.5 lb-ft)

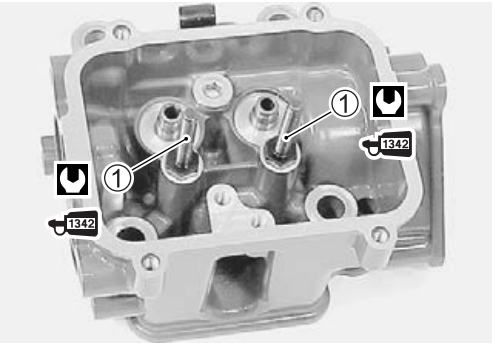

CYLINDER/CRANKSHAFT/PISTON/CAMSHAFT

DISASSEMBLY

Before performing service work in this section:
- **Remove power unit. (See page 7-5 to 7-9.)**
- **Remove cylinder head. (See page 7-16 to 7-18.)**

Remove the camshaft ①.

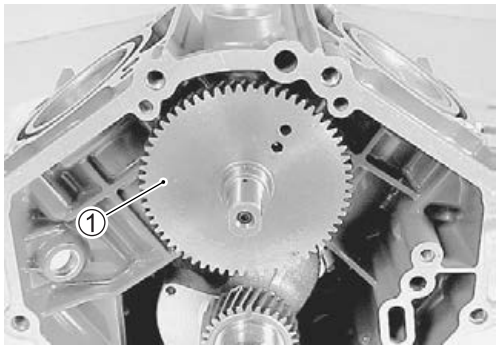

Remove the four (4) tappets ②.

NOTE:
For proper assembly, mark cylinder number on all pistons, conrods, and conrod caps, using quick drying paint.

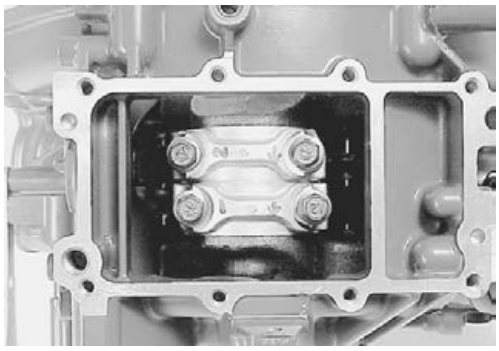

Remove all conrod cap bolts ① and conrod caps ②.

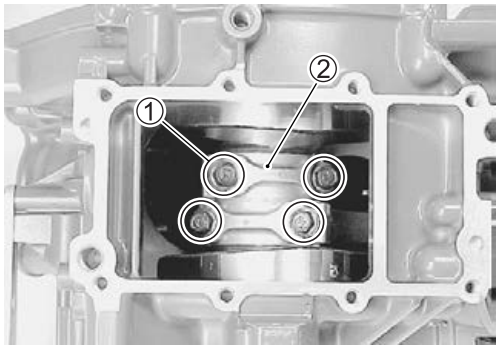

Mark cylinder number on pistons using quick dry paint.
Push piston (with conrod) out through the top of cylinder bore.

NOTE:

- *To prevent damage to piston rings, decarbon top of cylinder bore wall before removing piston.*
- *Reassemble each conrod cap to its original position after removing piston from bore.*

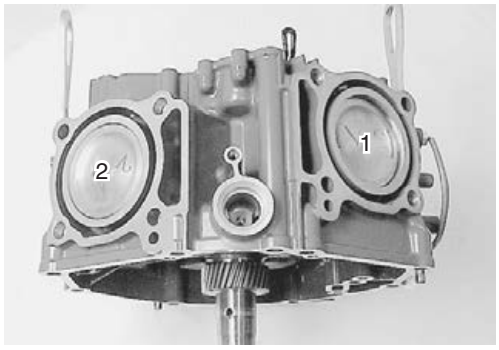

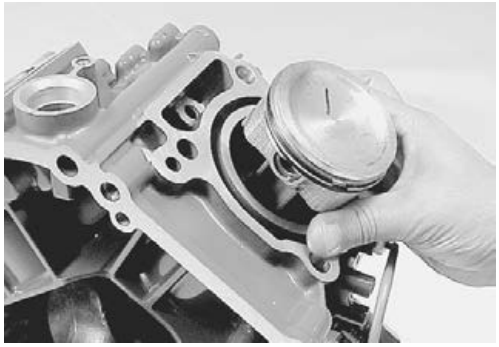

Remove two compression rings (top and 2nd) and oil ring from piston.
Mark cylinder number on conrod using quick dry paint.

Remove piston pin circlips as shown.

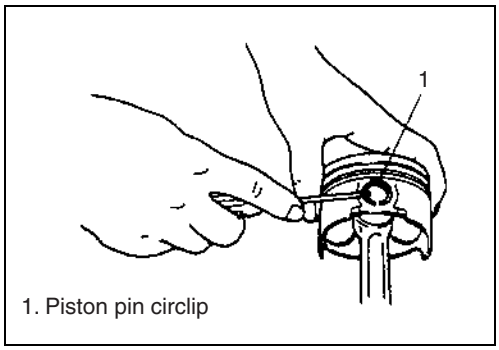

1. Piston pin circlip

Remove piston pin from conrod.

NOTE:
Reassemble each piston, piston pin and conrod in their original combination and position.

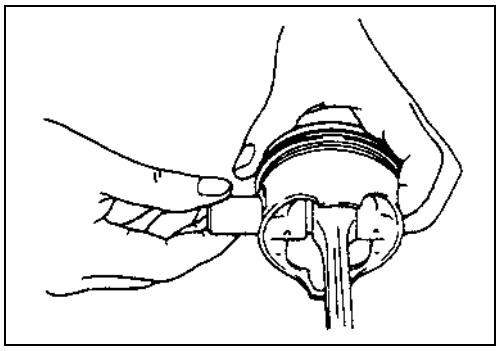

Set the special tool as shown, then push crankshaft ① out by turning bolt ⓐ.

TOOL 09910-99510: Crankshaft remover

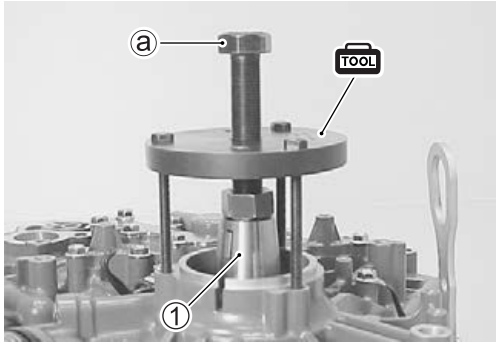

Remove oil filter ②.

TOOL 09915-47341: Oil filter wrench

Remove oil pressure switch ③.

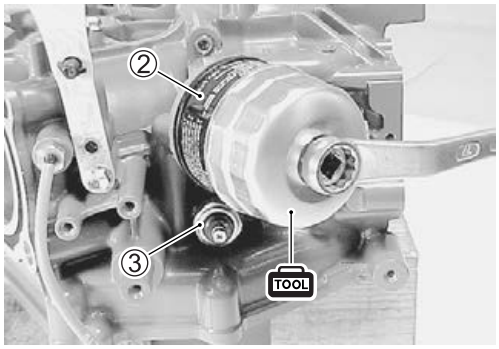

Disassembly of idle gear

1. Remove the idle gear shaft ① and washer ②.

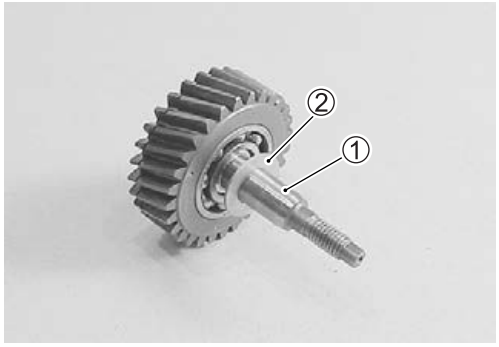

2. Remove circlip ③, washer ④ and No.1 gear ⑤.
   Remove the spring plate ⑥.

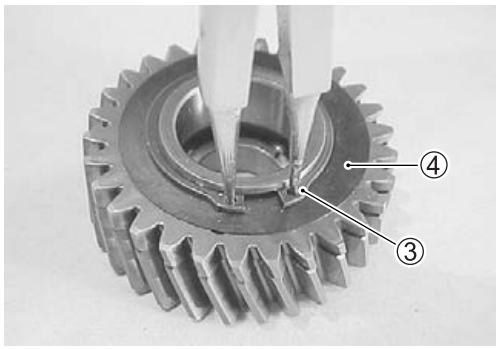

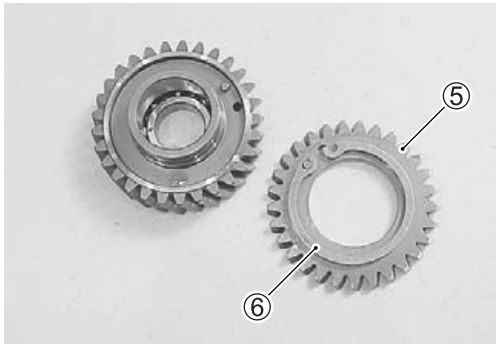

Disassembly of camshaft timing gear

1. Remove circlip ① and washer ②.
2. Remove the No.1 gear ③ and spring plate ④.

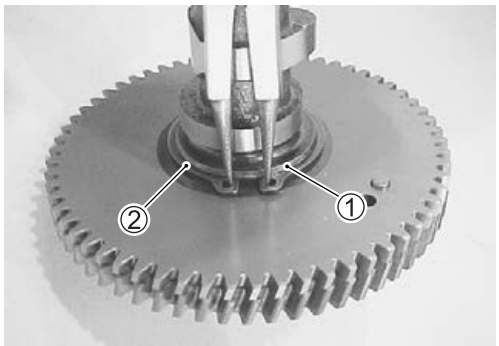

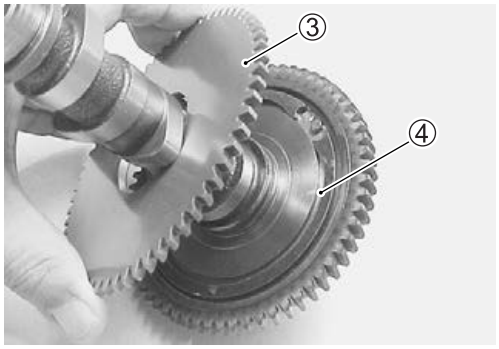

INSPECTION/SERVICING

NOTE:
If cracks, excessive wear or other damage is found on any component, replace component.

CAMSHAFT

Cam face

Inspect cam face for scratches and wear.

Cam wear

Using micrometer, measure cam height Ⓗ.

TOOL 09900-20202: Micrometer

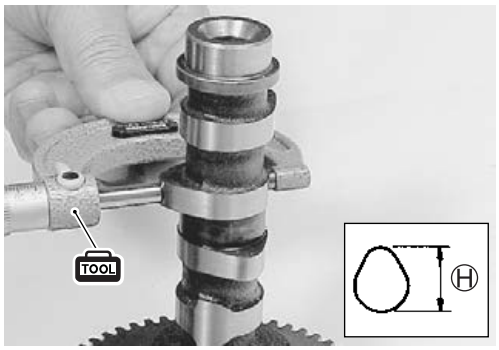

Cam height

Standard:

IN. 32.921 – 33.081 mm (1.2961 – 1.3024 in)
EX. 32.921 – 33.081 mm (1.2961 – 1.3024 in)

Service limit:

IN. 32.821 mm (1.2922 in)
EX. 32.821 mm (1.2922 in)

If measurement exceeds service limit, replace camshaft.

CAMSHAFT JOURNAL

Check camshaft journals for pitting, scratches, wear or damage.
If any of the above conditions are found, replace camshaft.

Decompression parts

Inspect the decompression parts in the camshaft.
If abnormal movement is found, replace camshaft.

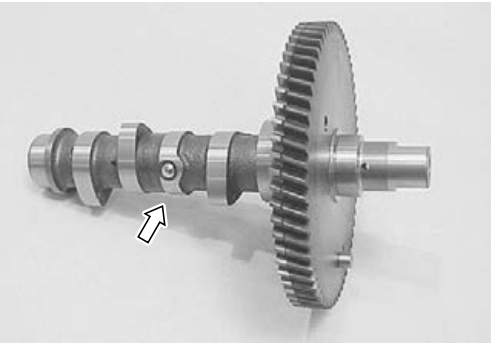

CYLINDER

- **Cylinder distortion**
  Using a straightedge and thickness gauge, measure cylinder distortion (gasket surface) at a total of six (6) locations as shown.

  TOOL 09900-20803: Thickness gauge

  Cylinder distortion
  Service limit: 0.03 mm (0.001 in)

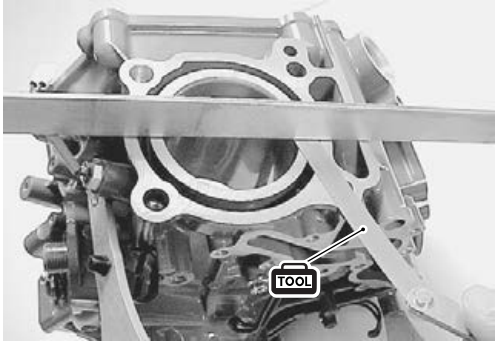

If measurement exceeds service limit, resurface or replace cylinder.

NOTE:
Cylinder can be resurfaced, using a surface plate and #400 grit wet sand paper.

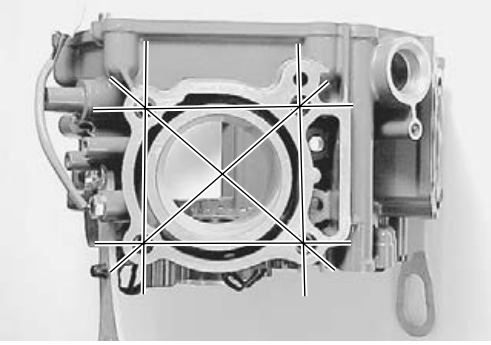

- **Water jackets**
  Check water jackets.
  If clog or obstruction is found, clean water jacket.

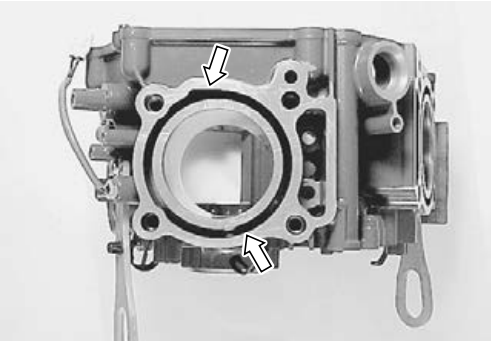

- **Cylinder bore**
  Inspect cylinder walls for scratches, roughness, or ridges which indicate excessive wear.
  If cylinder bore is very rough, deeply scratched or ridged, bore cylinder and use oversize piston.

- **Cylinder bore wear (difference)**
  Using telescoping gauge, measure cylinder bore in both axial (vertical line, following crankshaft) and transverse (horizontal line across crankshaft) directions at two positions as shown in figure.

NOTE:
Purchase a commercially available telescoping gage for this measurement.

1. Telescoping gauge

Check for followings:
- Difference between measurements at the two positions (taper).
- Difference between axial and transverse measurement (out-of-round).

Cylinder bore wear (difference)
Service limit: 0.10 mm (0.0039 in)

If measurement exceeds service limit, bore or replace cylinder.

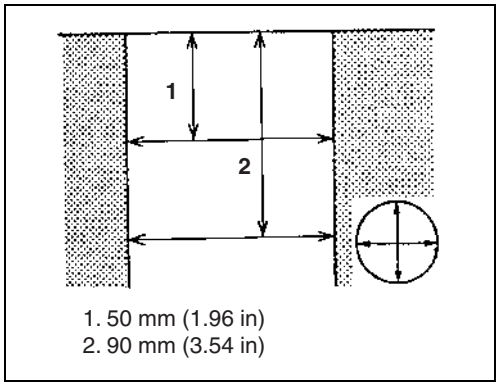

1. 50 mm (1.96 in)
2. 90 mm (3.54 in)

PISTON TO CYLINDER CLEARANCE

(1) Measure the piston diameter at a point 13 mm (0.512 in) above the piston skirt at a right angle to the piston pin bore.

TOOL 09900-20203: Micrometer

Piston skirt diameter
Standard: 70.970 – 70.990 mm (2.7941 – 2.7949 in)

(2) Measure the cylinder bore at 50 mm (1.969 in) below the cylinder head gasket surface at a right angle to the crankshaft pin.

NOTE:
Purchase a commercially available telescoping gage for this measurement.

Cylinder bore diameter
Standard: 71.000 – 71.020 mm (2.7953 – 2.7961 in)

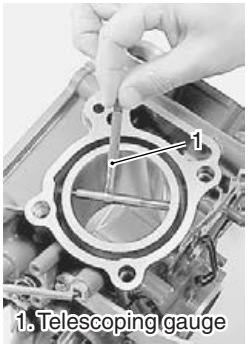

1. Telescoping gauge

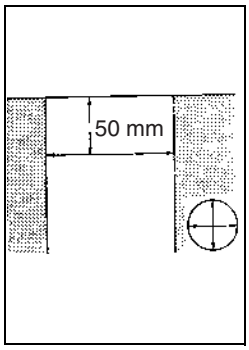

(3) Calculate the piston/cylinder clearance (Clearance equals difference between piston diameter and cylinder bore measurements).

Piston to cylinder clearance
Standard: 0.020 – 0.040 mm (0.0008 – 0.0016 in)
Service limit: 0.100 mm (0.0039 in)

If clearance exceeds service limit, replace piston and/or cylinder or bore cylinder.

Identification of oversize piston/piston ring

One oversize piston/piston ring components, 0.50 mm, is available.

Oversize piston/piston ring are marked as shown, below.

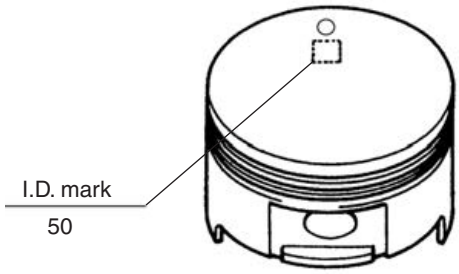

- **Piston**

Oversize	I.D. mark
0.50 mm	50

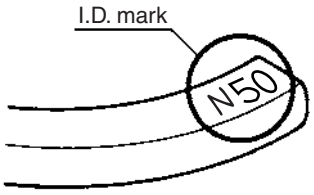

1st, 2nd ring

- **1st & 2nd Piston ring**

Oversize	I.D. mark
0.50 mm	N50

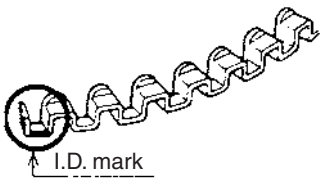

Oil ring spacer

- **Oil ring**

Oversize	I.D. mark
0.50 mm	One (1) Blue paint

PISTON

- Inspect piston for faults, cracks or other damage. Damaged or faulty piston(s) should be replaced.

- **Piston ring to groove clearance**
  Before checking, piston grooves must be clean, dry and free of carbon.
  Fit piston ring into piston groove, and measure clearance between ring and ring groove using thickness gauge.

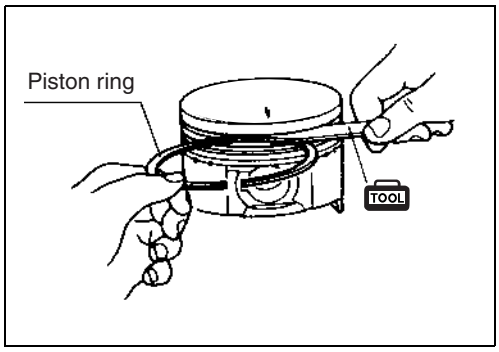

TOOL 09900-20803: Thickness gauge

Piston ring to groove clearance
Standard:
1st 0.030 – 0.070 mm (0.0012 – 0.0028 in)
2nd 0.020 – 0.060 mm (0.0008 – 0.0024 in)
Service limit:
1st 0.12 mm (0.005 in)
2nd 0.10 mm (0.004 in)

If measurement exceeds service limit, replace piston and/or piston ring.

Piston ring groove width
Standard:
1st 1.02 – 1.04 mm (0.0402 – 0.0409 in)
2nd 1.21 – 1.23 mm (0.0476 – 0.0484 in)
Oil 2.01 – 2.03 mm (0.0791 – 0.0799 in)

Piston ring thickness
Standard:
1st 0.97 – 0.99 mm (0.0382 – 0.0390 in)
2nd 1.17 – 1.19 mm (0.0461 – 0.0469 in)

PISTON RING

Piston ring end gap

Measure piston ring end gap with piston ring in the lowest position of cylinder bore.

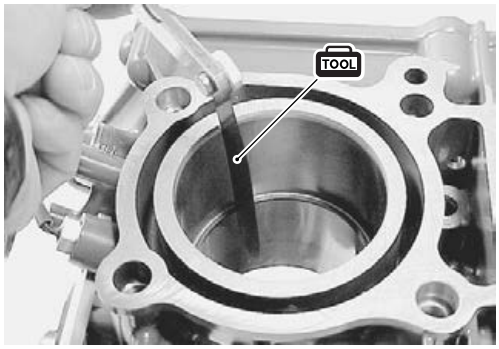

TOOL 09900-20803: Thickness gauge

Piston ring end gap
Standard:
1st 0.12 – 0.27 mm (0.0047 – 0.0106 in)
2nd 0.35 – 0.50 mm (0.0138 – 0.0197 in)
Service limit:
1st 0.70 mm (0.028 in)
2nd 1.00 mm (0.039 in)

If measurement exceeds service limit, replace piston ring.

Piston ring free end gap

Measure piston ring free end gap using vernier calipers.

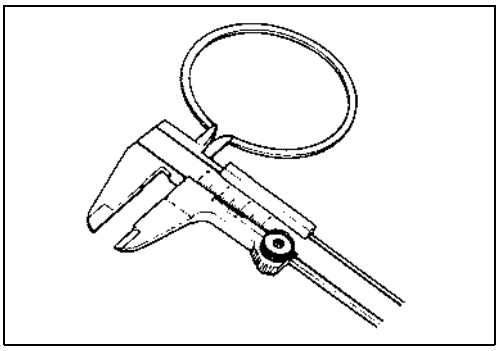

TOOL 09900-20101: Vernier calipers

Piston ring free end gap
Standard:
1st Approx. 8.0 mm (0.3150 in)
2nd Approx. 10.0 mm (0.3937 in)
Service limit:
1st 6.4 mm (0.2520 in)
2nd 8.0 mm (0.3150 in)

If measurement exceeds service limit, replace piston ring.

PISTON PIN

Check piston pin, conrod small end bore and piston pin hole for wear or damage.
If badly worn or damaged, replace component.

Piston pin clearance

- Check the piston pin clearance in the conrod small end. Replace the conrod if its small end is badly worn or damaged or if clearance exceeds service limit.

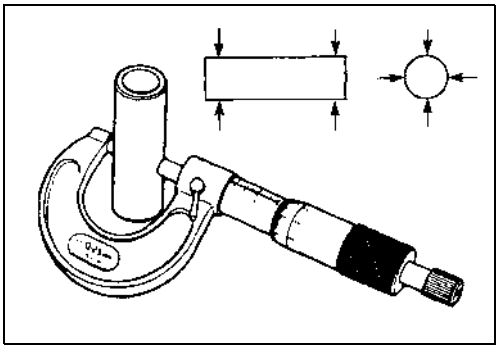

TOOL 09900-20205: Micrometer
09900-20605: Dial calipers

Piston pin outside diameter
Standard: 17.995 – 18.000 mm (0.7085 – 0.7087 in)
Service limit: 17.980 mm (0.7079 in)

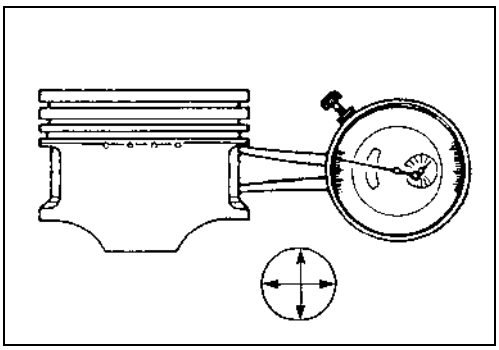

Piston pin hole diameter
Standard: 18.006 – 18.014 mm (0.7089 – 0.7092 in)
Service limit: 18.030 mm (0.7098 in)

Conrod small end bore
Standard: 18.006 – 18.014 (0.7089 – 0.7092 in)

Pin clearance in piston pin hole
Standard: 0.006 – 0.019 mm (0.0002 – 0.0007 in)
Service limit: 0.040 mm (0.0016 in)

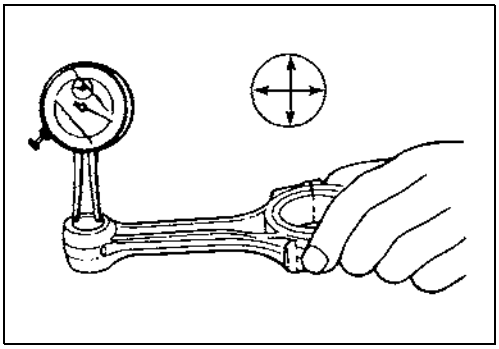

Pin clearance in conrod small end
Standard: 0.006 – 0.019 mm (0.0002 – 0.0007 in)
Service limit: 0.07 mm (0.0028 in)

CONROD BIG END SIDE CLEARANCE

Measure conrod big end side clearance with conrods installed on crank pin as shown.

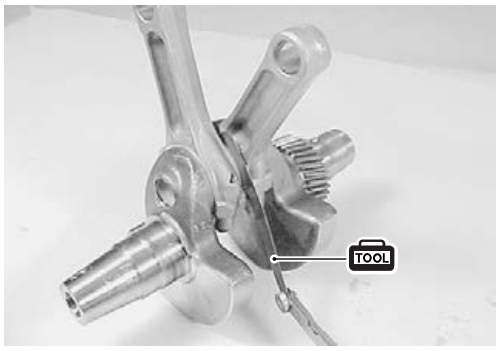

TOOL 09900-20803: Thickness gauge

Conrod big end side clearance
Standard: 0.07 – 0.30 mm (0.0028 – 0.0118 in)
Service limit: 1.0 mm (0.0394 in)

If measurement exceeds service limit, replace conrod and/or crankshaft.

Conrod big end width
Standard: 21.950 – 22.050 mm (0.8642 – 0.8681 in)

Crank pin width
Standard: 44.170 – 44.220 mm (1.7390 – 1.7409 in)

CONROD BIG END OIL CLEARANCE

Check conrod big end oil clearance as follows;

(1) Clean surface of conrod, conrod cap, and crank pin.

NOTE:
Reassemble each conrod and conrod cap to their original position.

(2) Place a piece of Plastigauge on crank pin parallel to crankshaft. Avoid placing Plastigauge over oil hole.

TOOL 09900-22301: Plastigauge

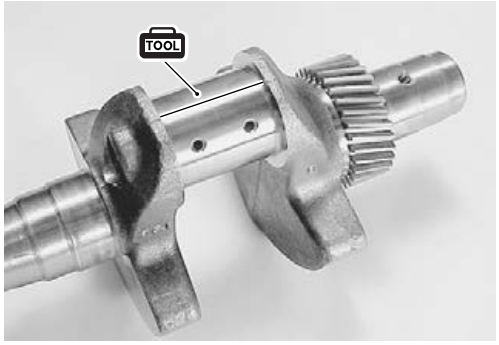

(3) Install conrod cap and conrod to crank pin.

NOTE:
Make sure conrod is installed in the direction shown.

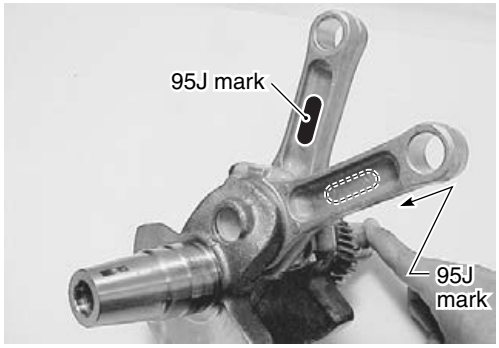

(4) Apply engine oil to conrod bolts and tighten bolt in two steps.

Conrod cap bolt:
1st step 6 N·m (0.6 kg-m, 4.3 lb-ft)
Final step 12 N·m (1.2 kg-m, 8.7 lb-ft)

NOTE:
Do not rotate conrod with Plastigauge in place.

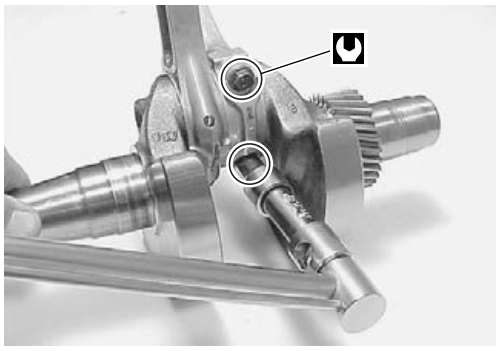

(5) Remove conrod and conrod cap from crank pin.
(6) Using scale on Plastigauge envelope, measure Plastigauge width at its widest point.

Conrod big end oil clearance
Standard: 0.020 – 0.030 mm (0.0008 – 0.0012 in)
Service limit: 0.065 mm (0.0026 in)

If measurement exceeds service limit, replace conrod and/or crankshaft.

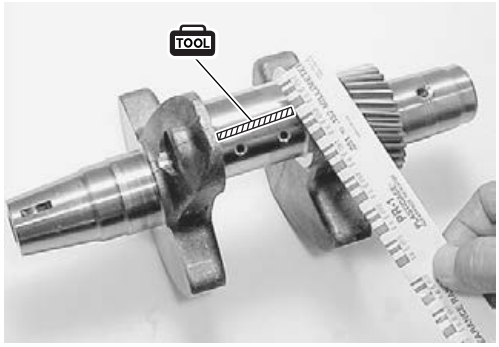

CRANK PIN

Inspect crank pin for uneven wear or damage.
Measure crank pin for out-of-round or taper with micrometer.
If crank pin is damaged, out-of-round or taper is out of service limit, replace crankshaft.

09900-20202: Micrometer

Out-of-round : A – B
Taper : a – b

Out-of-round and taper
Service limit: 0.01 mm (0.0004 in)

Crank pin diameter
Standard: 38.990 – 39.000 mm (1.5350 – 1.5354 in)

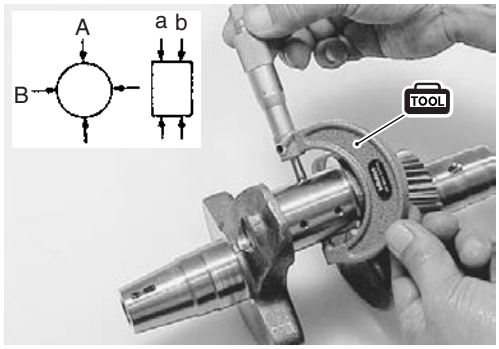

CONROD BIG END INSIDE DIAMETER

Measure the conrod big end inside diameter as follows.

1. Clean surface of conrod and conrod cap.
2. Install the conrod cap to conrod.
3. Apply engine oil to conrod bolts and tighten the bolts to specified torque.

Conrod cap bolt: 12 N·m (1.2 kg-m, 8.7 lb-ft)

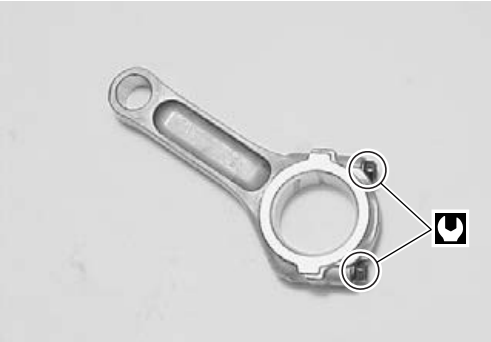

4. Measure the conrod big end inside diameter.

09900-20605: Dial calipers

Conrod big end inside diameter
Standard: 39.015 – 39.025 mm (1.5360 – 1.5364 in)

CRANKSHAFT

■ **Crankshaft runout**

Measure the crankshaft runout as shown in the figure.

09900-20602: Dial gauge
09900-20701: Magnetic stand
09900-21304: Steel "V" block set

Crankshaft runout
Service limit: 0.05 mm (0.002 in)

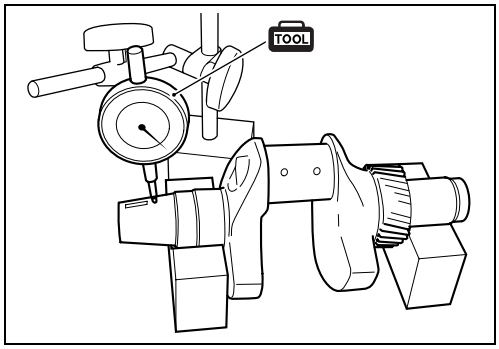

If the measurement exceeds the service limit, replace the crankshaft.

■ **Timing gear**

Inspect timing gear, replace crankshaft if damaged or worn.

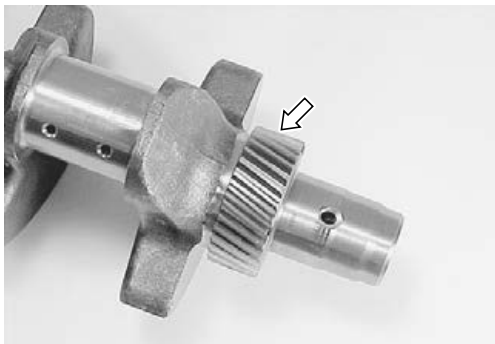

OIL SEAL AND BEARING

Visually check the oil seals installed in the cylinder block and bottom crankcase for cut, nick, excessive wear or other damage. Visually check the crankshaft bearings for pitting, noisy, rough or other damage.

CAUTION

- **Do not reuse the oil seal once removed. Always use a new oil seal.**
- **Do not reuse the crankshaft bearing once removed. Always use a new bearing.**

Replacing crankshaft upper oil seal/bearing

1. Remove the crankshaft upper oil seal.

TOOL 09913-50121: Oil seal remover

2. Drive the bearing out downward.

TOOL 09913-75810: Bearing remover & Installer

3. Apply engine oil to outer circumference of bearing.
   Drive bearing down into position until it bottoms its shoulder.

TOOL 09926-68310: Bearing Installer
09924-74510: Installer handle

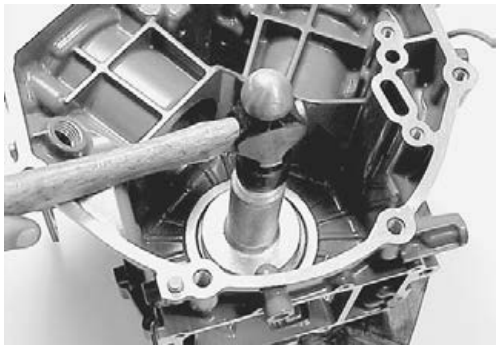

4. Apply engine oil to outer circumference of oil seal.
   Drive oil seal down into position as shown in figure. Do not contact oil seal to bearing.

NOTE:
Install oil seal with lip (spring side) facing inward.

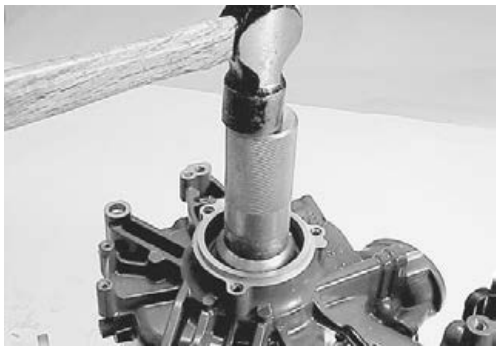

Replacing crankshaft lower bearing and oil seal

1. Use sliding hammer and bearing remover to remove the crankshaft lower bearing.
   Insert the remover in the bearing, then drive the bearing out from the lower crankcase by sliding hammer.

TOOL 09941-64511: Bearing remover
09930-30104: Sliding hammer

2. Remove the crankshaft lower oil seal.

TOOL 09913-50121: Oil seal remover

3. Apply engine oil to outer circumference of oil seal.
   Drive oil seal down into position as shown figure.

NOTE:
Install oil seal with lip (spring side) facing inward.

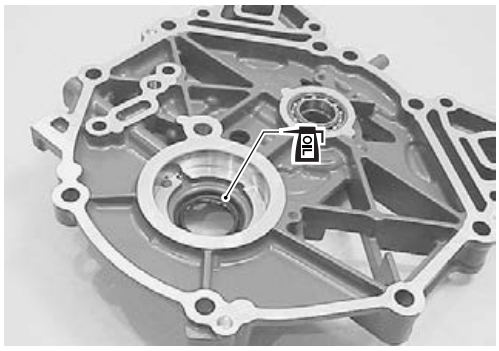

4. Apply engine oil to outer circumference of bearing.
   Drive bearing down into position until it bottoms its shoulder.

TOOL 09913-75510: Bearing installer

NOTE:
- *Install bearing with seal plate side facing outside.*
- *Before installing bearing, apply grease to hatched area of seal plate as shown in the illustration.*

99000-25010: SUZUKI SUPER GREASE "A"

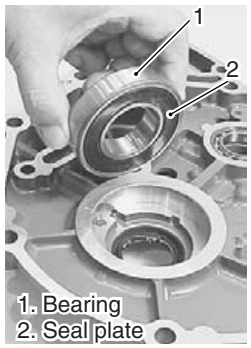

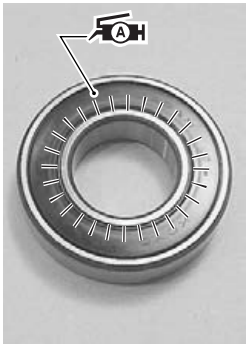

REASSEMBLY

Assembly is reverse order of disassembly paying special attention to the following steps.

CAUTION

If original components are not replaced, each piston, piston pin and conrod is to be assembled and installed in its original order and position.

PISTON TO CONROD

Apply engine oil to piston pin ②, piston pin bore and conrod ③.
Assemble conrod ③ to piston ① as shown in figure and insert piston pin ② through piston and conrod.
Install piston pin circlips ④.

NOTE:

- *Make sure conrod is installed in the direction shown.*
- *End gap of the circlip should not be aligned with the cutaway in the piston pin bore.*
- *Always use new piston pin circlip.*

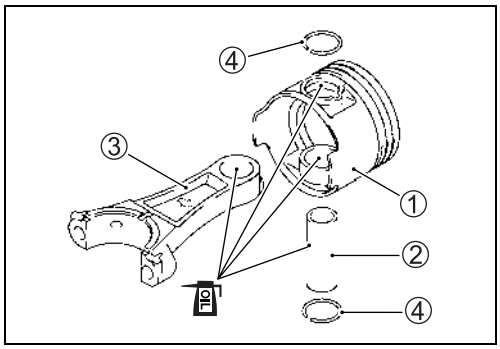

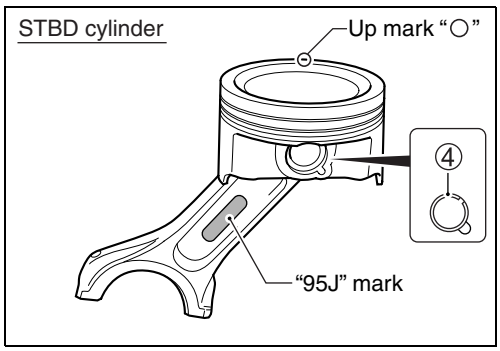

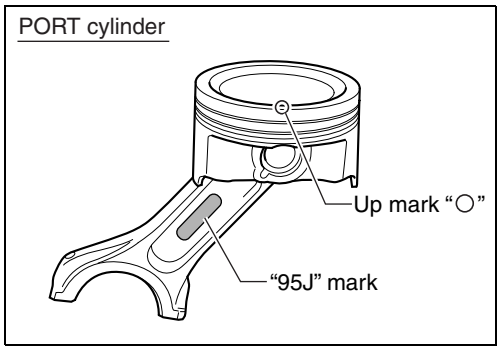

PISTON RING TO PISTON

■ Oil ring

- Apply engine oil to piston rings.
- Install spacer ① first, then side rails ② to piston.

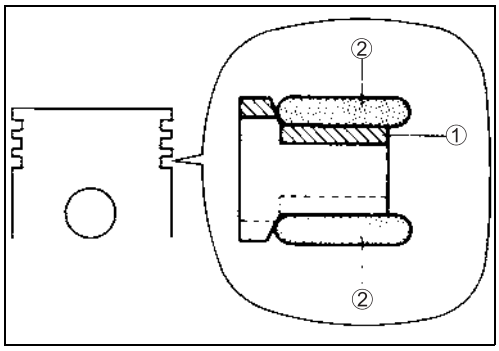

CAUTION

When installing spacer, do not allow spacer ends to overlap in groove.

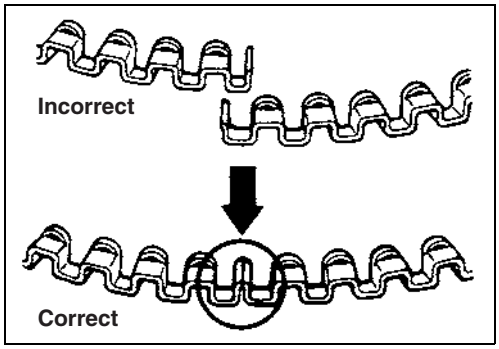

■ 1st and 2nd piston ring

- Apply engine oil to piston ring.
- Install 2nd ring and 1st ring to piston.

NOTE:

- *1st and 2nd ring differ in shape and color as shown in figure.*
- *Also indicated in figure, the 1st and 2nd ring are marked with the letter "N" which must face towards top of piston.*

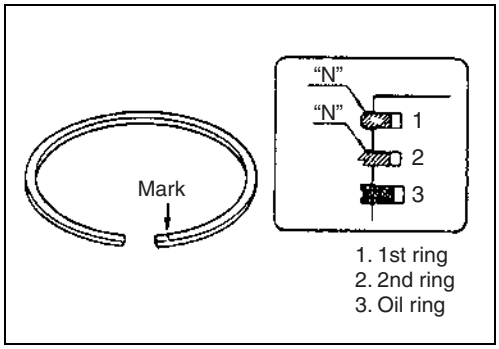

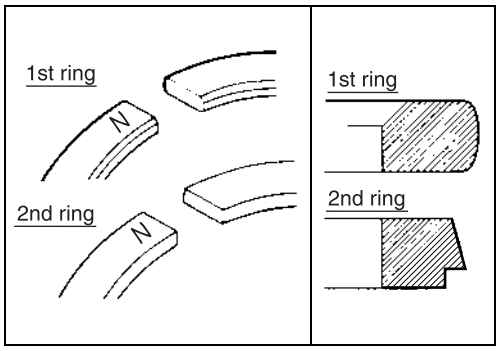

■ Ring gap direction

Position piston rings so gaps are staggered at approximately 90 degree angles as shown.

① 1st ring ③ 2nd ring
② Oil ring lower side rail ④ Oil ring upper side rail

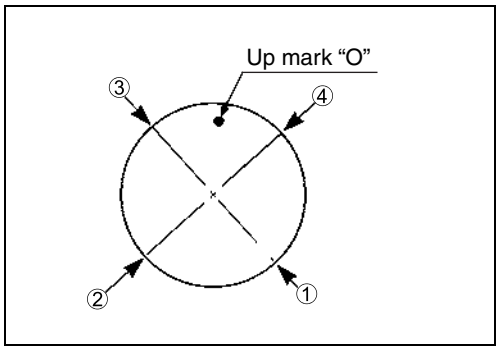

CAUTION

Failure to stagger piston ring gaps may result in crankcase oil dilution.

CRANKSHAFT TO CYLINDER

Apply engine oil to upper oil seal lip and crankshaft bearing.
Apply engine oil to crankshaft journals and crank pin.
Install crankshaft in cylinder block.

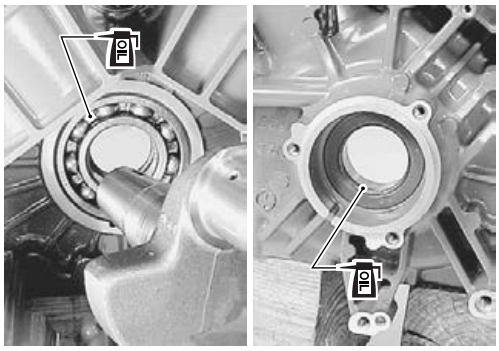

Set the special tool as shown.
Pull up crankshaft into position by turning bolt ⓐ.

TOOL 09910-99510: Crankshaft remover and installer

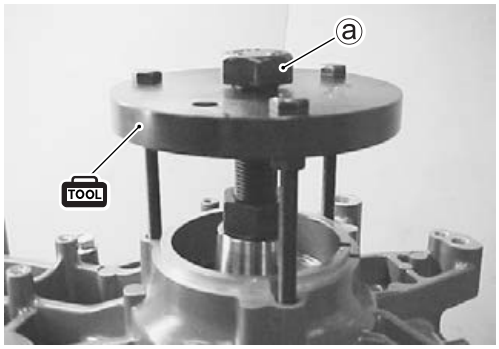

PISTON TO CYLINDER

Apply engine oil to piston and cylinder walls.

Insert piston and conrod assembly into cylinder bore from cylinder head side using special tool.

TOOL 09916-77310: Piston ring compressor

NOTE:
Position the "circle" mark (○) on piston head to flywheel side.

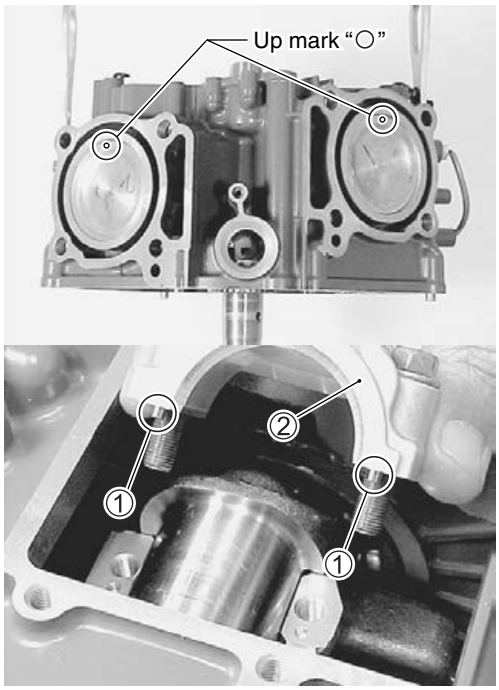

CONROD CAP

Apply engine oil to crank pin, conrod and conrod cap.
Install dowel pins ① and conrod cap ② to conrod.

CAUTION

Reassemble each conrod cap to its original position.

Apply engine oil to conrod bolts.
Tighten conrod cap bolts ③ in two steps.

Conrod cap bolt:
1st step 6 N·m (0.6 kg-m, 4.3 lb-ft)
Final step 12 N·m (1.2 kg-m, 8.7 lb-ft)

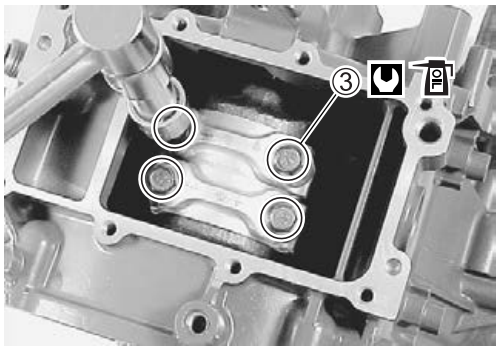

ASSEMBLY OF CAMSHAFT TIMING GEAR

1. Fit the spring plate ② on the No.2 gear ① so that the pin ⓐ contacts the end of the spring plate.

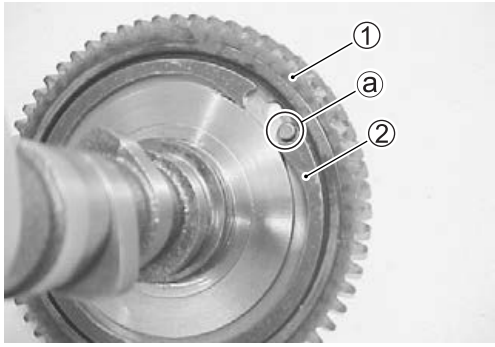

2. Install the No.1 gear ③ to the No.2 gear so that the pin ⓑ contacts the other end of the spring plate.

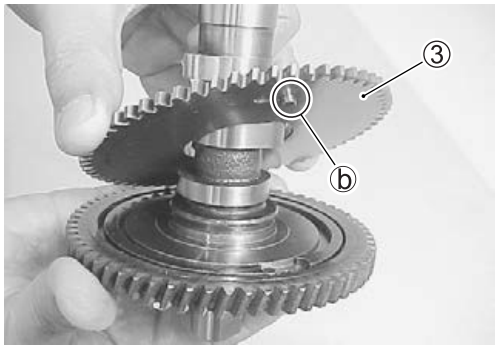

3. Install washer ④ and circlip ⑤.

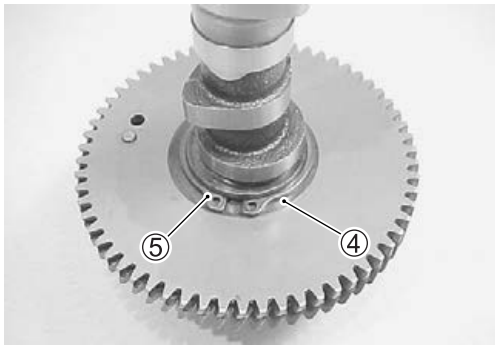

CAMSHAFT TO CYLINDER

Apply engine oil to tappets ①.
Install tappets to cylinder block.

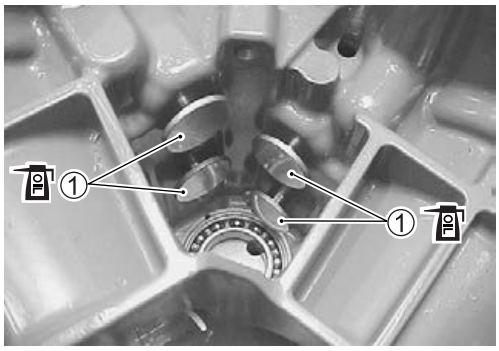

Apply engine oil to the surface of each camshaft lobe and journals.
Turn the No.1 gear to counterclockwise, then insert the special tool (pin) through hole Ⓐ on No.1 gear and hole Ⓑ on No.2 gear as shown.

TOOL 09917-29510: Scissors gear alignment pin set

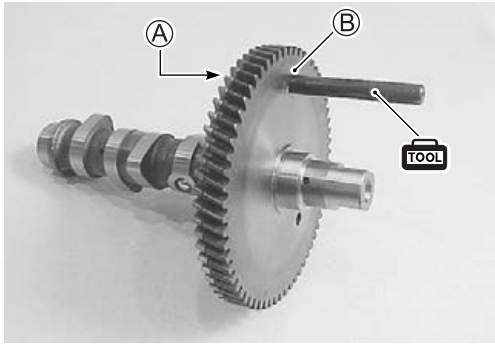

Install camshaft ② to cylinder block.

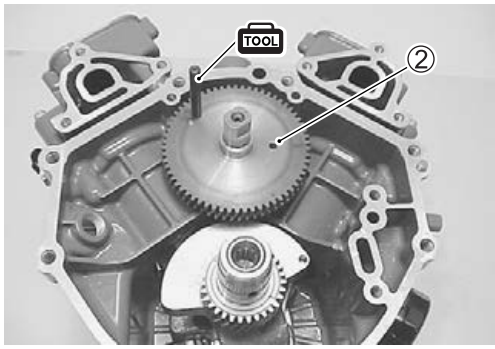

CYLINDER HEAD

Install STBD/PORT cylinder head assembly.
For cylinder head installation, see page 7-19 to 7-21.

ASSEMBLY OF IDLE GEAR

1. Fit the scissors gear spring plate ② onto the No.2 gear ① as shown.

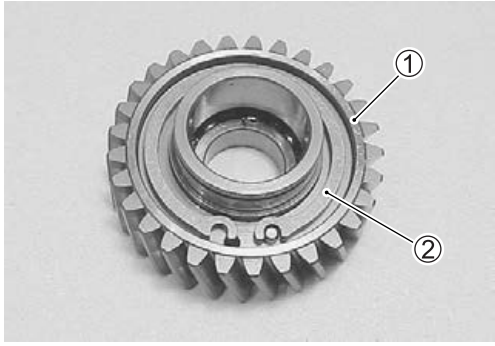

2. Install the No.1 gear ③ to the No.2 gear so that the pin ⓐ fits into the half-round hole on the end of the spring plate ②.

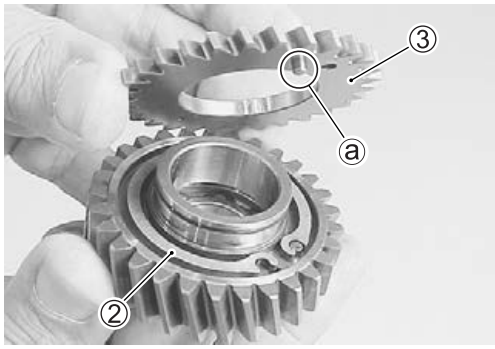

3. Install washer ④ and circlip ⑤.

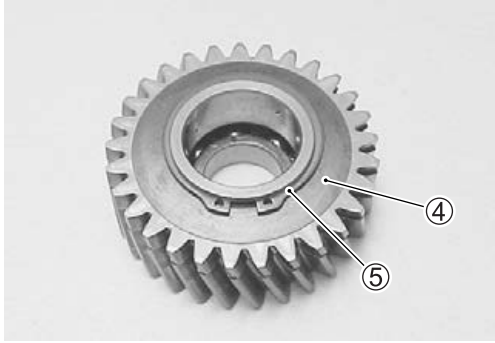

4. Install the idle gear shaft ⑥ and washer ⑦.

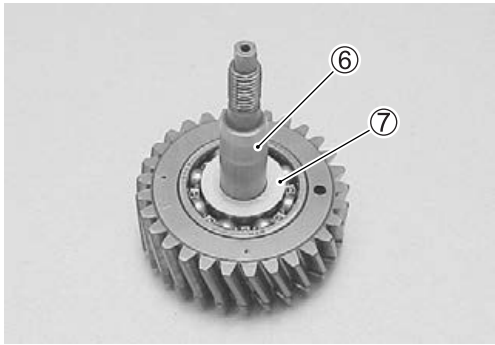

BOTTOM CRANKCASE AND IDLE GEAR

1. Turn the crankshaft and camshaft to bring their positions where their timing gear aligning marks are located as shown in figure.

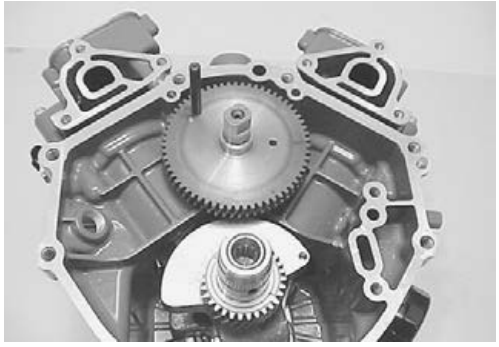

2. Turn the No.1 idle gear clockwise until its hole ⓐ aligns with the hole ⓑ on the No.2 idle gear.
   Insert the special tool (Pin) through the holes ⓐ and ⓑ.

TOOL 09917-29510: Scissors gear alignment pin set

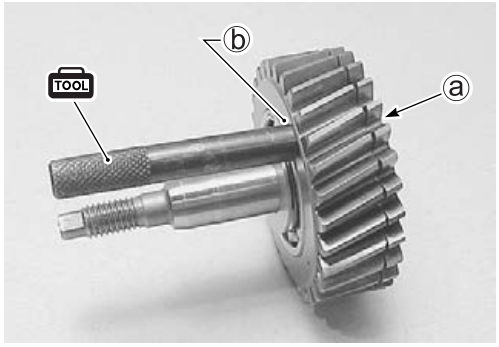

3. Install the idle gear ①.
   Check that the aligning marks on three gears; idle gear, camshaft timing gear and crankshaft timing gear; are in alignment as shown in figure.

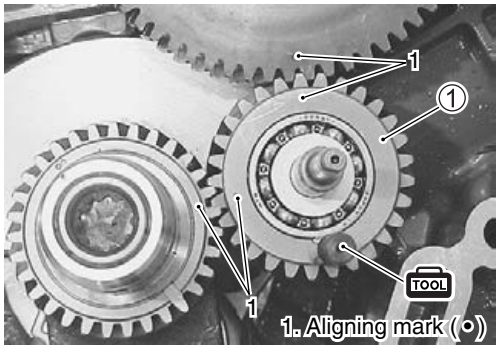

4. Place the dowel pins ② and a gasket ③ into position.

5. Place the bottom crankcase into position ④.
   Fit the 8 mm and 10 mm bolts of the special tool set at the positions indicated in the figure.
   Tighten each bolt gradually and evenly until they bottom.

TOOL 09910-99510: Crankshaft remover and installer

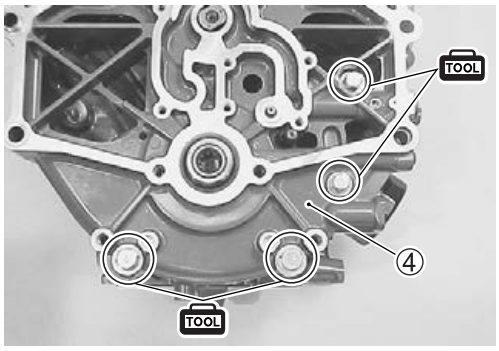

NOTE:
When tightening the lower crankcase bolts, care should be used so that both the crankcase and the cylinder block mating faces are always held parallel to each other.
To keep the two mating faces parallel, tighten the bolts gradually while tapping four corners of the case (as indicated) using a rubber hammer.

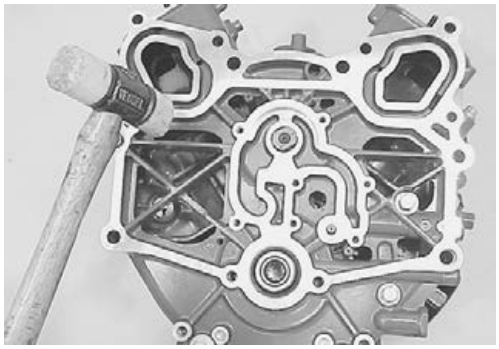

6. When each of the special tool bolts has bottomed out in the bolt hole, replace them with the proper crankcase bolt.
   Install washer ⑤ and idle gear shaft nut ⑥, then tighten nut securely.
   Tighten four crankcase bolts to specified torque.

Crankcase bolt:
8 mm 23 N·m (2.3 kg-m, 16.6 lb-ft)
10 mm 50 N·m (5.0 kg-m, 36.0 lb-ft)

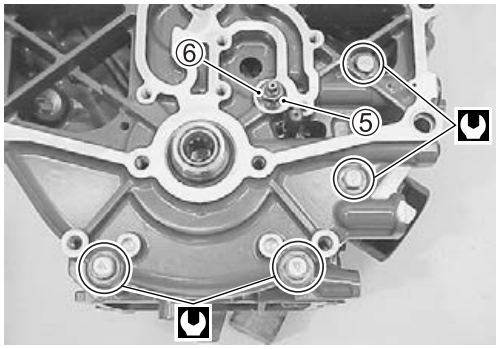

7. Check that the alignment marks each on the idle gear and camshaft timing gear are in alignment.

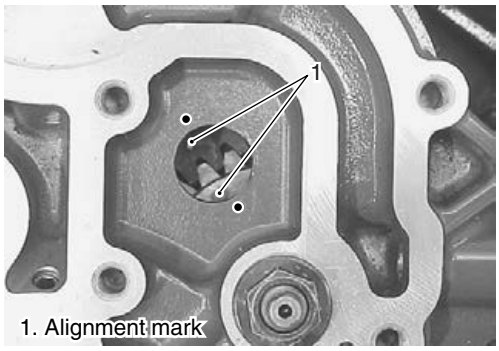

1. Alignment mark

8. Remove the special tool both from the camshaft timing gear and the idle gear.

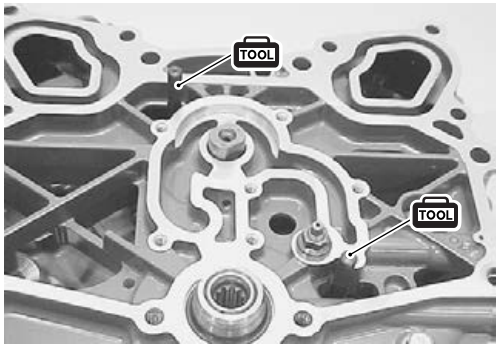

9. Turn the crankshaft in the normal rotating direction and check that the timing mark on the camshaft is pointing straight up (twelve o'clock) as shown in the figure when the crankshaft timing mark is pointing straight down (six o'clock).

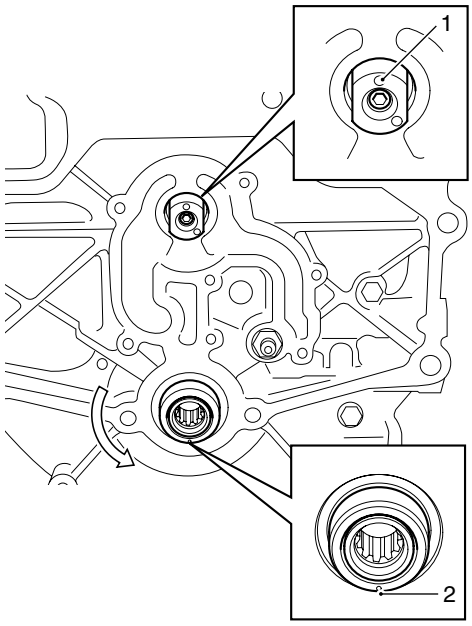

1. Timing mark on camshaft
2. Timing mark on crankshaft

THERMOSTAT

REMOVAL

1. Remove the flywheel. (See page 3-16.)
2. Remove the carburetor. (See page 5-4.)
3. Remove the thirteen (13) bolts securing the thermostat cover ① and oil gallery plate ②.

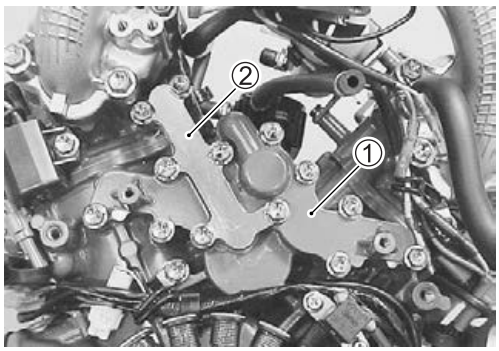

4. Remove the thermostat cover ① and thermostat ③.

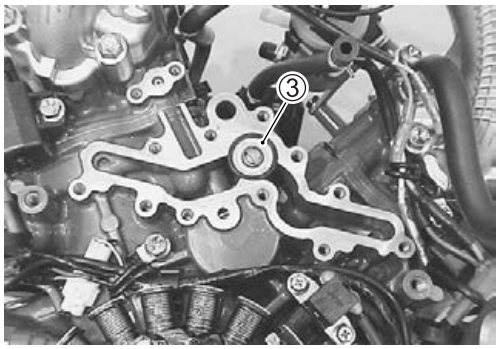

INSPECTION

- If salt deposits, corrosion, wear or other damage is found, clean or replace.

- **Thermostat operation**
  Check thermostat opening temperature as follows:
  - Insert a length of thread between thermostat valve/body and suspend thermostat in a container filled with water.
  - Place thermometer in container and heat water.
    Observe water temperature when thermostat valve opens and releases thread.

  Thermostat operating temperature
  Standard: 58 – 62 °C (136 – 144 °F)

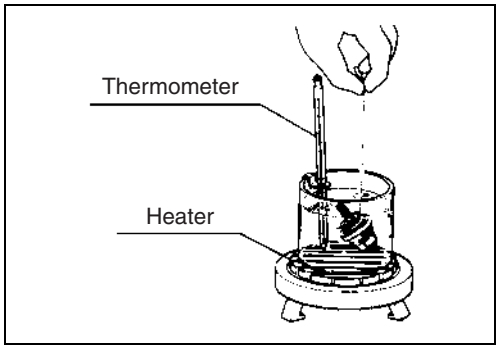

INSTALLATION

Installation is reverse order of removal with special attention to the following steps.

CAUTION

Do not reuse gasket. Always use a new gasket.

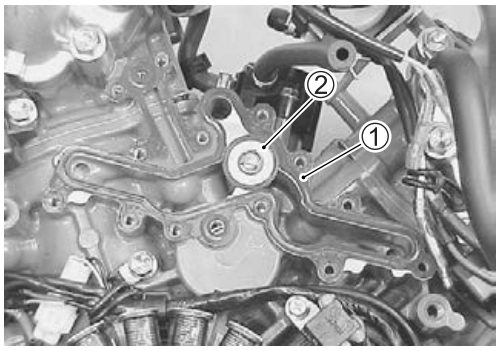

- Assemble gasket ①, thermostat ② and thermostat cover ③ to cylinder block and secure with bolts.

Thermostat cover bolt: 10 N·m (1.0 kg-m, 7.2 lb-ft)

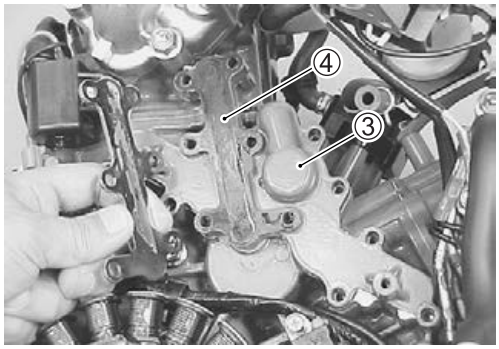

- Install gasket ④ and oil gallery plate ⑤, then secure it with bolts.
- Install carburetor assembly. (See page 5-5.)
- Install flywheel. (See page 3-18.)
- Check to ensure that all removed parts are back in place.

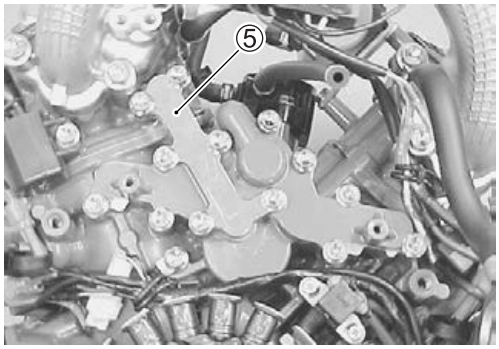

Checking

- Check fuel hose routing. (See page 10-9.)
- Check wire routing. (See page 10-5.)
- No fuel leakage is evident when fuel system is pressurized. (See page 5-3.)
- No water leakage is evident during final test running.

OPERATION

WATER COOLING SYSTEM

The water cooling system includes the lower unit water pump, lower unit to power unit water supply tube, oil pan water pressure valve, power unit water passages and thermostat.
This system cools both the power unit and exhaust and is shown in schematic form below.
If overheating occurs, the components of the cooling system must be inspected for blockage, corrosion build-up or component damage.

[Component inspection] [Refer to page]
Water pump / Impeller 9-12
Water tube 8-11
Thermostat 7-55
Water pressure valve 8-30
Cylinder head 7-24
Cylinder block 7-36

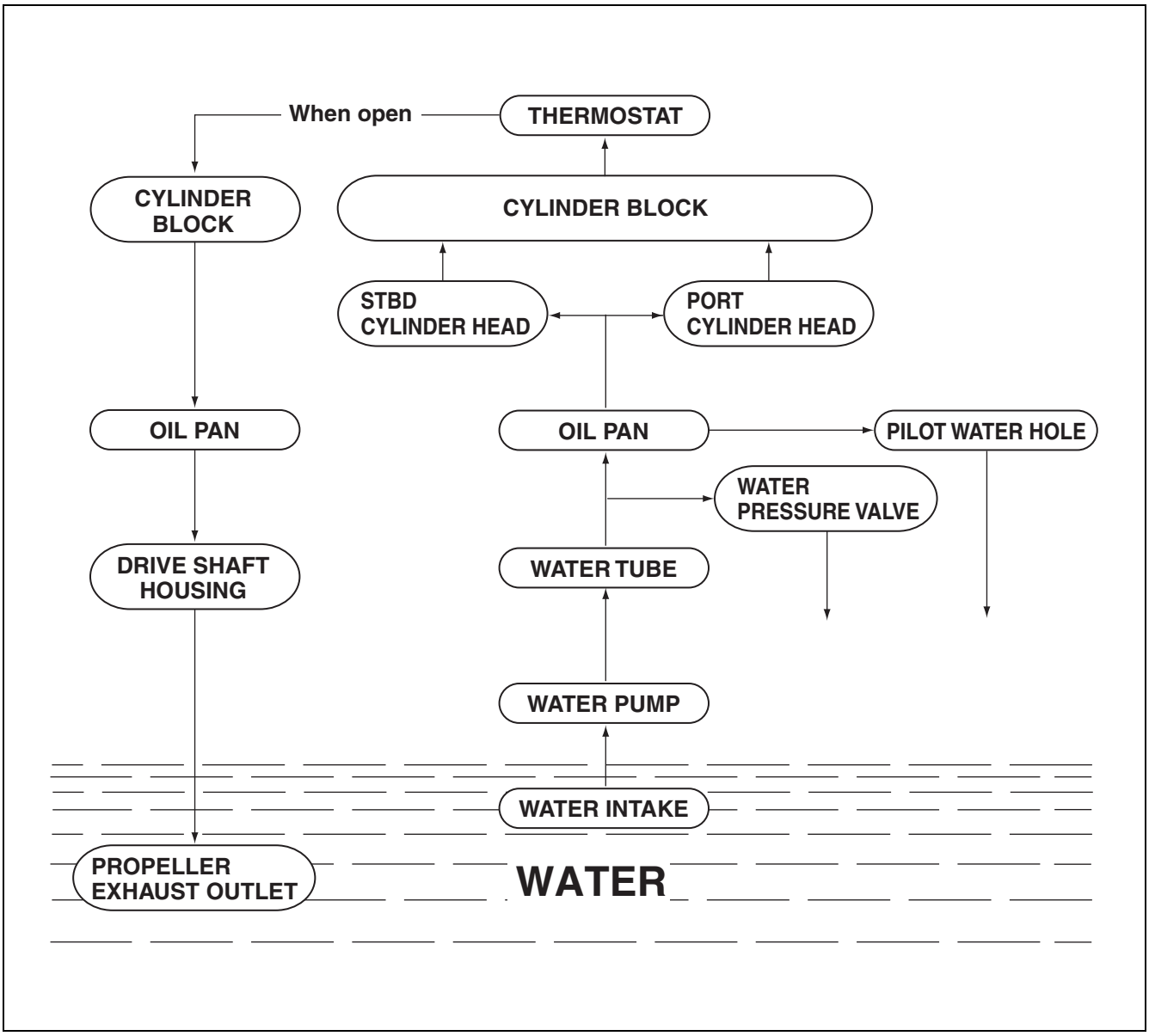

ENGINE LUBRICATION SYSTEM

A camshaft driven trochoid type pump provides engine oil to all power unit components requiring lubrication. Oil from the oil pan is drawn through the oil strainer and passed through a spin-on type oil filter before entering the main oil gallery.

A pressure regulator (relief valve) is positioned between the oil pump and oil filter to maintain oil pressure at a constant level.

From the main gallery, oil flow is directed through either drilled internal passages or by splash method to those surfaces requiring lubrication.
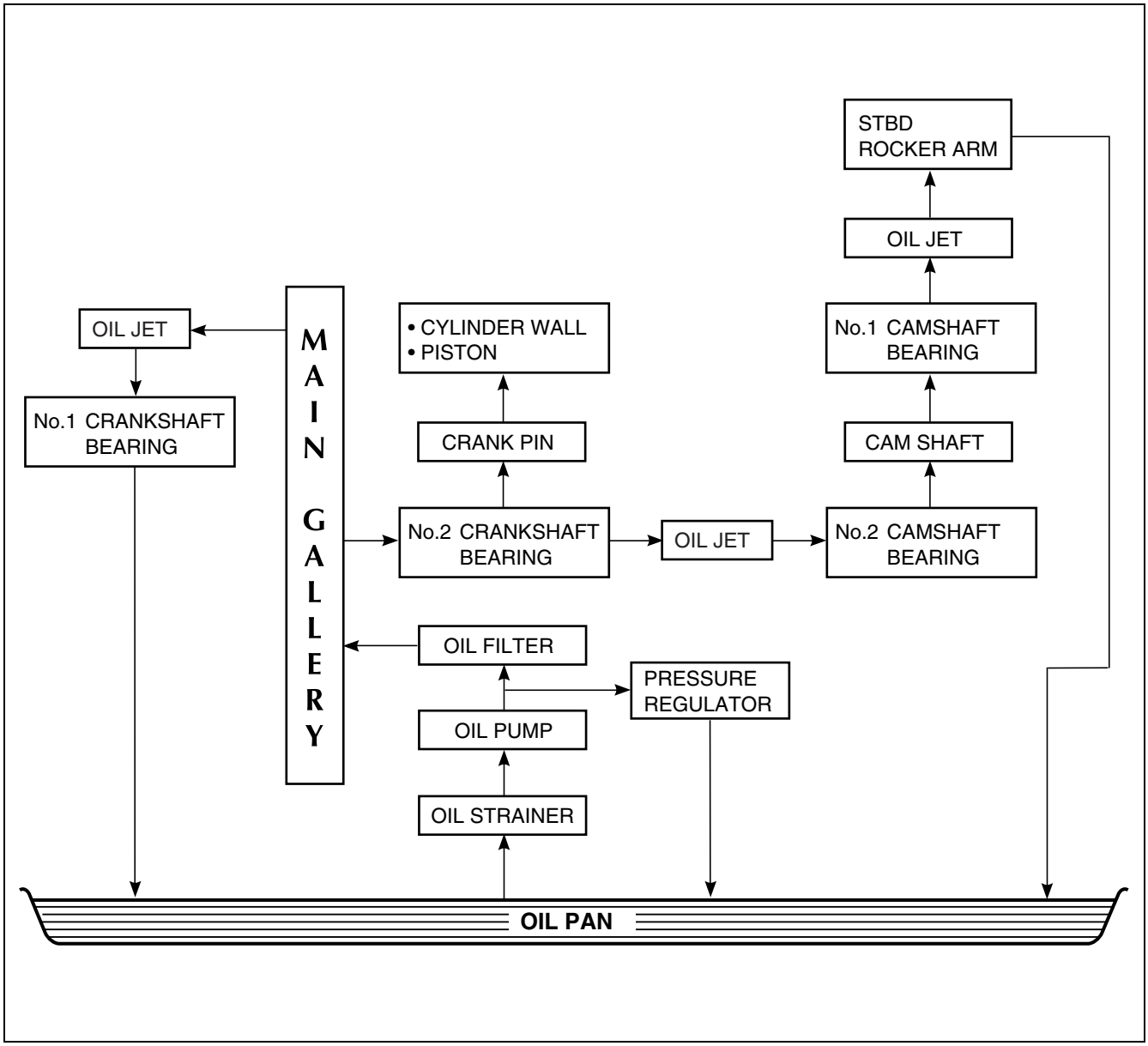
ENGINE OIL LUBRICATION CHART